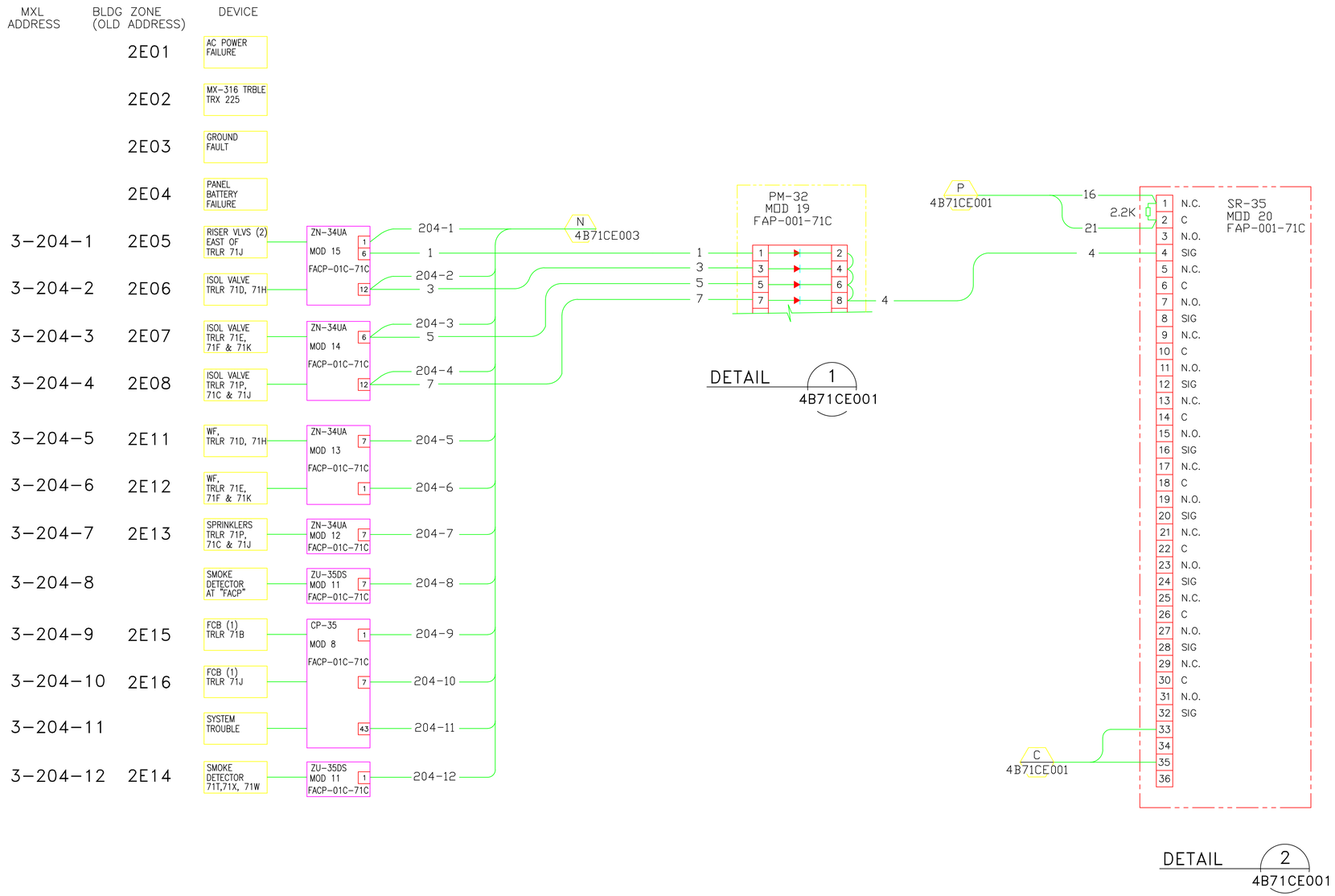

	ASBUILT REVISION B 1/10/2008	B	AD	LDD	MCD	01/10/2008	AS-BUILT RECORD DRAWING
		A	AD	LDD	MCD	10/5/2007	FIRE ALARM SYSTEM UPGRADE
PROFESSIONAL SEAL (IF REVISION, APPLIES ONLY TO REVISED WORK)	ISSUE (PROGRESS, ESTIMATE, BID, CONSTRUCTION, CONFORMED, REVISION, RECORD)	REVISION NUMBER	DRAWN BY	CHECKED BY	APPR'D BY	DATE	REMARKS

71C TRAILER

FIRE ALARM SYSTEM

LOGIC DIAGRAM, LOOP NO. 3

UNIVERSITY OF CALIFORNIA
LAWRENCE BERKELEY NATIONAL LABORATORY
FACILITIES DIVISION

		DATE
DRAWN BY	AD	8/28/2007
CHECKED BY	LDD	8/28/2007
APPROVED BY	MCD	8/28/2007
CAD FILE PATH	00022870	
SCALE	As Noted	
DRAWING NO.	4B71CE002B	SHEET 1 OF 1
PROJECT NO.	FB4010	