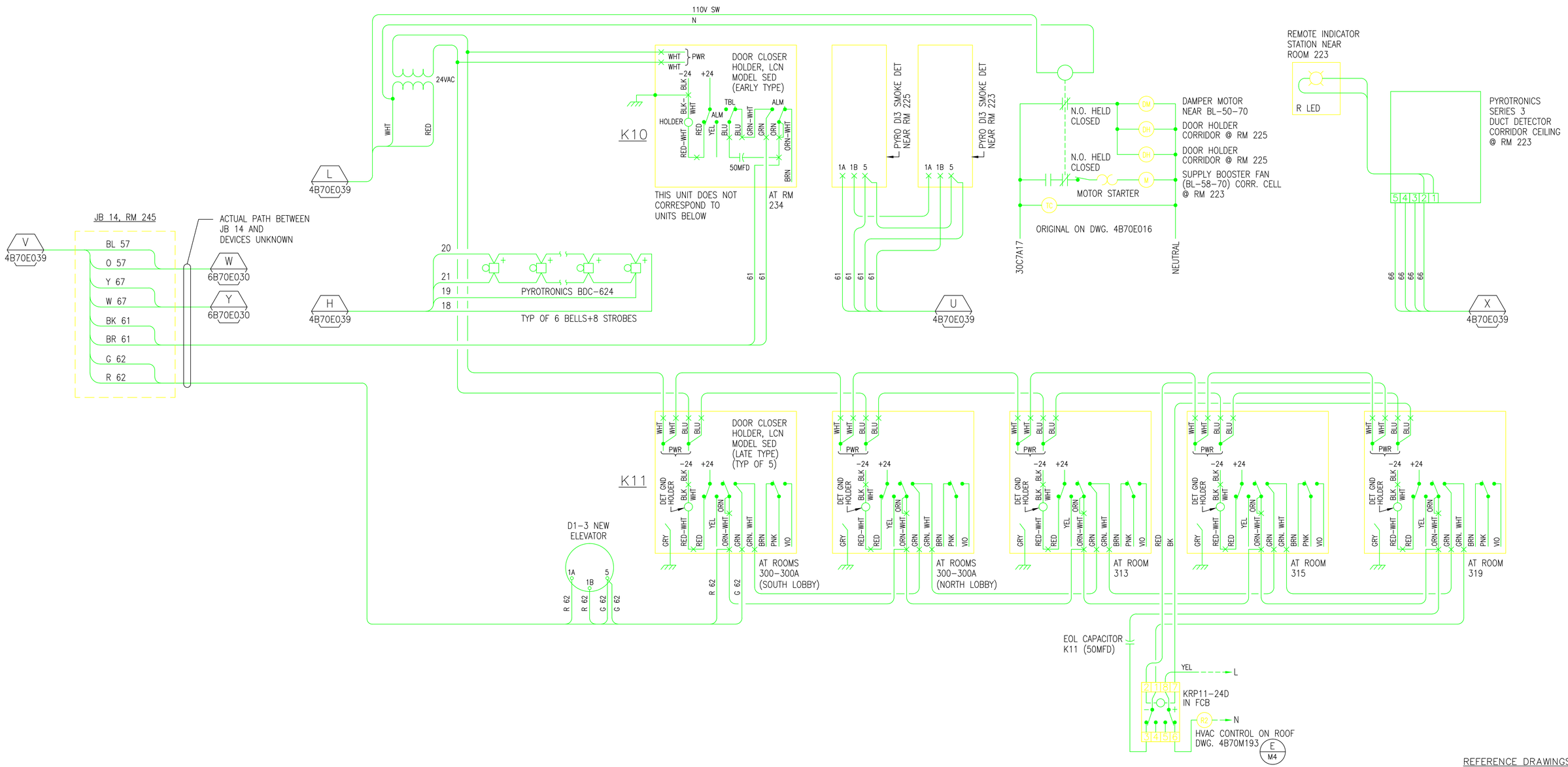

SMOKE CONTROL – BLDG CIRCUITS

REFERENCE DRAWINGS:
SEE 4B70E019 FOR REFERENCE DWGS.

DISTRIBUTION LIST:
2-ELECTRIC SHOP 76 (FILE I & II)
1-FILE III (B90J)
1-STICK FILE (B90J)
ORIGINAL-FLAT FILE (B90F)

REVISION NUMBER	DRAWN BY	CHECKED BY	APPR'D BY	DATE	REMARKS
C	ROB	MCG	MCG	10-23-00	AS-BUILT
B	LM			3-10-97	AUTOCAD CONVERSION
A	LSR			11-6-85	BLDG 61 ALARM RELOC. TO 6R9653

70 FIRE ALARM SYSTEM
DOOR HOLDER & SMOKE CONTROL
FIELD DEVICE WIRING

UNIVERSITY OF CALIFORNIA LAWRENCE BERKELEY LABORATORY
FACILITIES DEPARTMENT

DRAWN BY	LSR
DATE	11/6/1985
CHECKED BY	
APPROVED BY	
CAD FILE PATH	00011584
SCALE	As Noted
DRAWING NO.	4B70E040C
SHEET	1 OF1
PROJECT NO.	153794