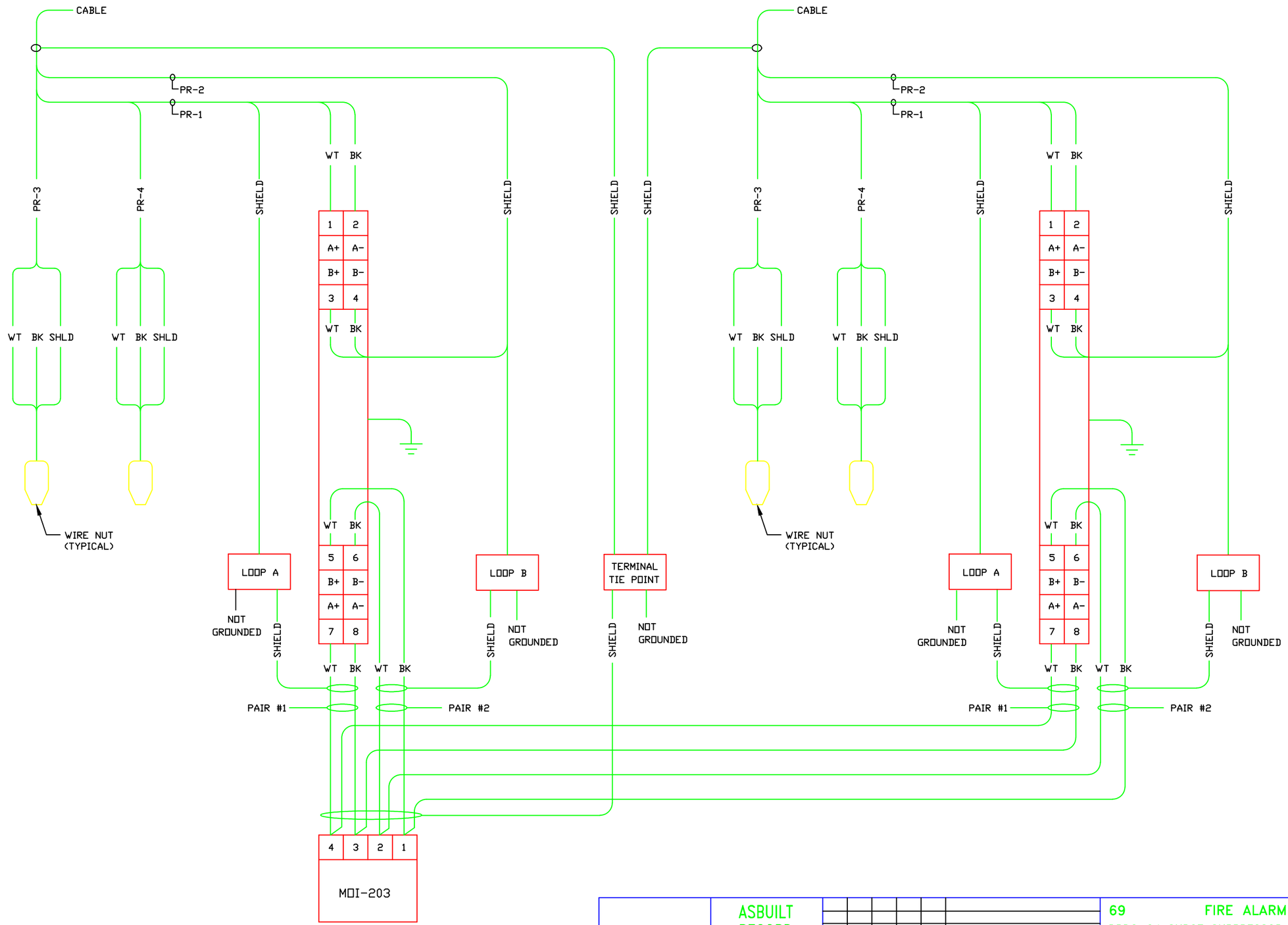

ASBUILT RECORD

12/4/2006

PROFESSIONAL SEAL (IF REVISION, APPLIES ONLY TO REVISED WORK)	ISSUE (PROGRESS, ESTIMATE, BID, CONSTRUCTION, CONFORMED, REVISION, RECORD)	REVISION NUMBER	DRAWN BY	CHECKED BY	APPR'D BY	DATE	REMARKS
	ASBUILT RECORD 12/4/2006						

69 FIRE ALARM SYSTEM

DRDC-24 SURGE SUPPRESSOR

WIRING DIAGRAM

UNIVERSITY OF CALIFORNIA
LAWRENCE BERKELEY NATIONAL LABORATORY
FACILITIES DIVISION

		DATE
DRAWN BY	AD	11/22/2006
CHECKED BY	LDD	11/22/2006
APPROVED BY	MCD	11/22/2006
CAD FILE PATH	00021650	
SCALE	Full	
DRAWING NO.	4B69E063_	
PROJECT NO.	FAB040	
SHEET	1 OF 1	