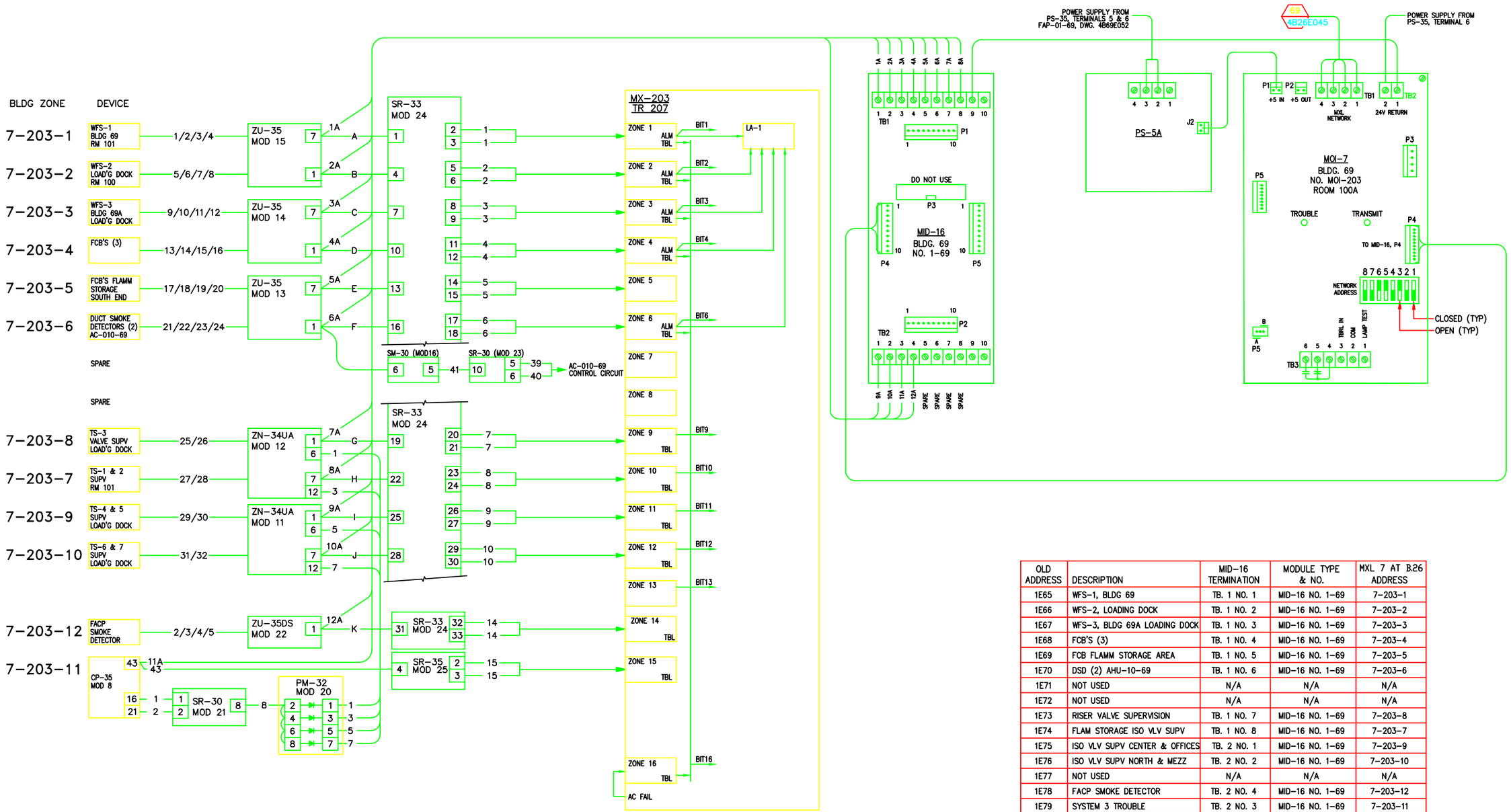


| OLD ADDRESS | DESCRIPTION | MID-16 TERMINATION | MODULE TYPE & NO. | MXL 7 AT B.26 ADDRESS |
|---|---|---|---|---|
| 1E65 | WFS-1, BLDG 69 | TB. 1 NO. 1 | MID-16 NO. 1-69 | 7-203-1 |
| 1E66 | WFS-2, LOADING DOCK | TB. 1 NO. 2 | MID-16 NO. 1-69 | 7-203-2 |
| 1E67 | WFS-3, BLDG 69A LOADING DOCK | TB. 1 NO. 3 | MID-16 NO. 1-69 | 7-203-3 |
| 1E68 | FCB'S (3) | TB. 1 NO. 4 | MID-16 NO. 1-69 | 7-203-4 |
| 1E69 | FCB FLAMM STORAGE AREA | TB. 1 NO. 5 | MID-16 NO. 1-69 | 7-203-5 |
| 1E70 | DSD (2) AHU-10-69 | TB. 1 NO. 6 | MID-16 NO. 1-69 | 7-203-6 |
| 1E71 | NOT USED | N/A | N/A | N/A |
| 1E72 | NOT USED | N/A | N/A | N/A |
| 1E73 | RISER VALVE SUPERVISION | TB. 1 NO. 7 | MID-16 NO. 1-69 | 7-203-8 |
| 1E74 | FLAM STORAGE ISO VLV SUPV | TB. 1 NO. 8 | MID-16 NO. 1-69 | 7-203-7 |
| 1E75 | ISO VLV SUPV CENTER & OFFICES | TB. 2 NO. 1 | MID-16 NO. 1-69 | 7-203-9 |
| 1E76 | ISO VLV SUPV NORTH & MEZZ | TB. 2 NO. 2 | MID-16 NO. 1-69 | 7-203-10 |
| 1E77 | NOT USED | N/A | N/A | N/A |
| 1E78 | FACP SMOKE DETECTOR | TB. 2 NO. 4 | MID-16 NO. 1-69 | 7-203-12 |
| 1E79 | SYSTEM 3 TROUBLE | TB. 2 NO. 3 | MID-16 NO. 1-69 | 7-203-11 |
| 1E80 | MX-203 (TR-207) TROUBLE | N/A | N/A | N/A |

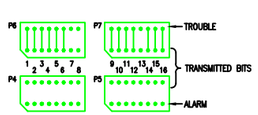


PROGRAM PLUGS

TRANSMITTER ID SWITCH

00011100=(28+1)=29 ON LOOP 1=129

ASBUILT

F

5/31/13

| REVISION NUMBER | DRAWN BY | CHECKED BY | APPR'D BY | DATE | REMARKS |
|---|---|---|---|---|---|
| F | DSV | LDD | MCD | 5/31/13 | AS BUILT PER FIELD VERIFICATION |
| E | AD | LDD | MCD | 12/05/06 | AS-BUILT RECORD DRAWING PER CONSTRUCTION MARK-UP |
| D | AD | LDD | MCD | 06/06/06 | AS-BUILT |
| C | AD | LDD | MCD | 06/06/06 | REVISED FOR MXL COPPER LOOP |
| B | AD | AD | MCG | 12/17/03 | AS-BUILT, RECORD DRAWING |
| A | MRC | AD | MCG | 11/05/03 | AS-BUILT, PHASE II FA UPGRADE |

PROFESSIONAL SEAL (IF REVISION, APPLIES ONLY TO REVISED WORK)

ISSUE (PROGRESS, ESTIMATE, BID, CONSTRUCTION, CONFORMED, REVISION, RECORD)

69 FIRE ALARM

LOGIC DIAGRAM AND

MOI/MID MODULE ARRANGEMENT

UNIVERSITY OF CALIFORNIA
LAWRENCE BERKELEY NATIONAL LABORATORY
FACILITIES DIVISION

DRAWN BY HYT DATE 2/12/2002
CHECKED BY HYT 2/12/2003
APPROVED BY
CAD FILE PATH
SCALE Full
DRAWING NO. 4B69E053F
SHEET 1 OF 1
PROJECT NO. FA8040