LABORATORY BUILDING SIGNALING LINE CIRCUIT RISER DIAGRAM

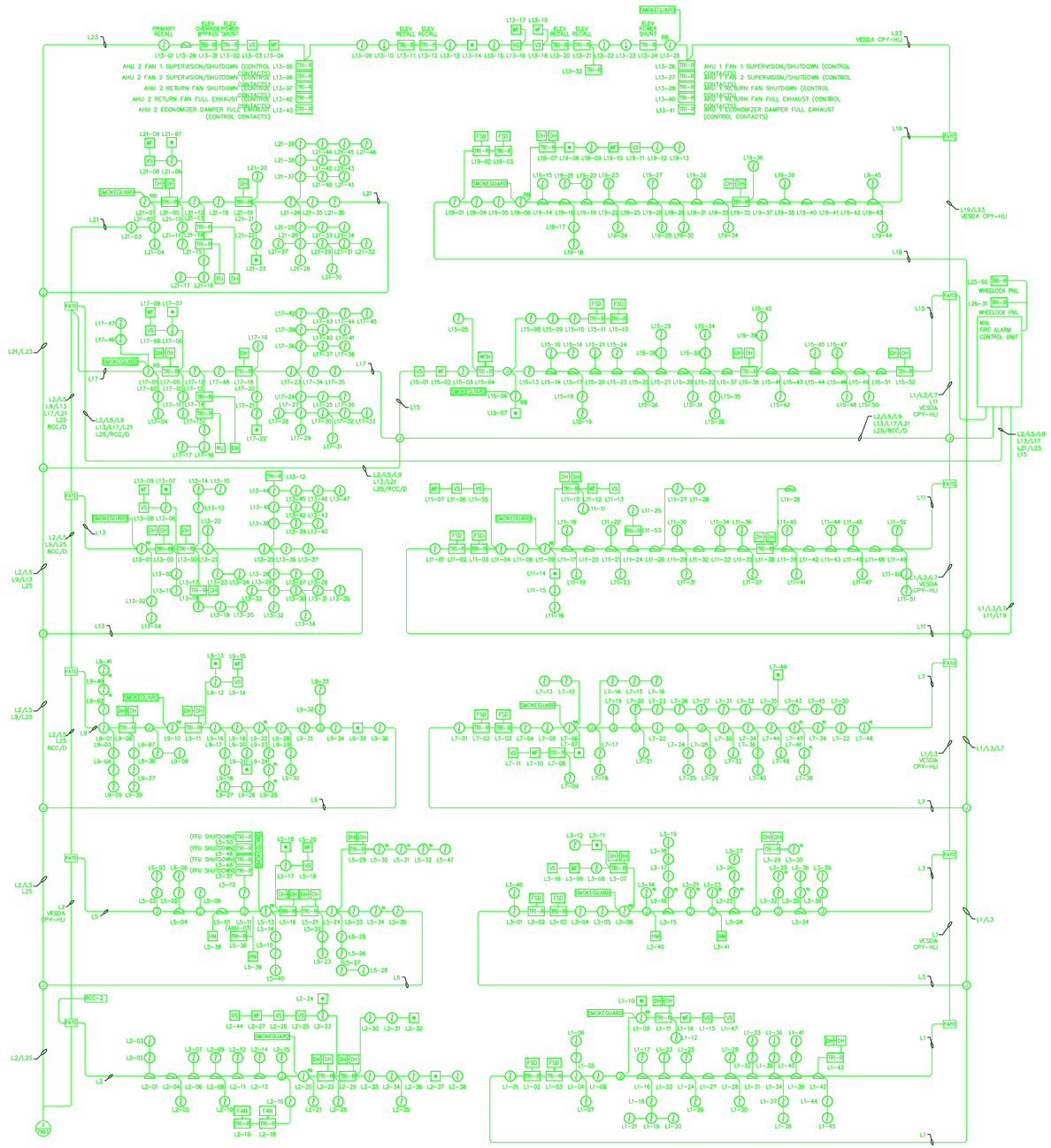

UTILITY BUILDING SIGNALING LINE CIRCUIT RISER DIAGRAM

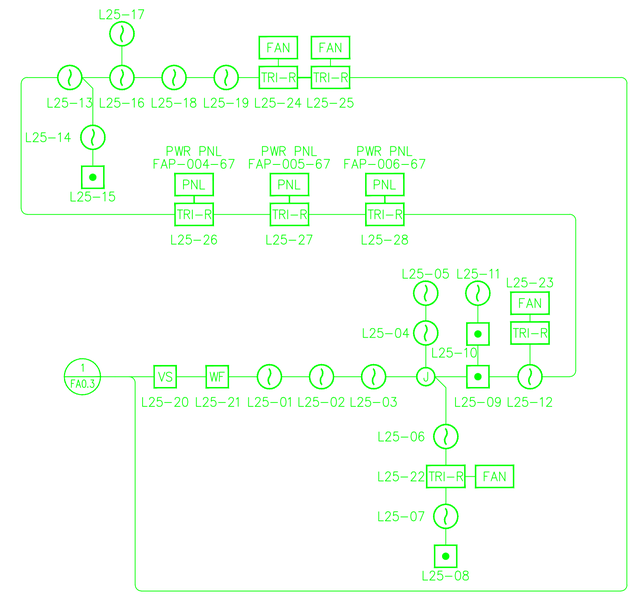

FIRE ALARM SYSTEM LEGEND

- L1-01 — SMOKE DETECTOR, ADDRESS AS NOTED
- L1-02 — DS — DUCT SMOKE DETECTOR, ADDRESS AS NOTED
- L1-03 — FIRE CALL BOX, ADDRESS AS NOTED
- L1-04 RI — SMOKE DETECTOR WITH REMOTE INDICATOR, ADDRESS AS NOTED
- L1-04 RB — SMOKE DETECTOR WITH RELAY BASE, ADDRESS AS NOTED
- L1-04 — SIDEWALL MOUNTED SMOKE DETECTOR, ADDRESS AS NOTED
- FACU — FIRE ALARM SYSTEM CONTROL UNIT (MXL)
- V-01 15 cd — S — STROBE, APPLIANCE NUMBER & MINIMUM CANDELA RATING AS NOTED
- A-01 110 cd — AV — HORN/STROBE, APPLIANCE NUMBER AND MINIMUM CANDELA AS NOTED
- A-01 — H — HORN, APPLIANCE NUMBER AND MINIMUM CANDELA AS NOTED
- RCC — REMOTE COMMAND CENTER (RCC-2)
- L1-05 — VS — FIRE SPRINKLER VALVE SUPERVISORY SWITCH, ADDRESS AS NOTED
- L1-06 — WF — FIRE SPRINKLER WATERFLOW SWITCH, ADDRESS AS NOTED
- DH — DOOR HOLDER (INSTALLED UNDER SEPARATE SECTION)
- TRI-R — INTELLIGENT INTERFACE MODULE
- HM — HAZARDOUS MATERIAL SPILL ALARM PULL STATION
- HSSD — HIGH SENSITIVITY SMOKE DETECTOR (HSSD)
- HSSD SAMPLE PIPING AND SAMPLE ORIFICE
- RU — ROLL-UP DOOR RELEASE (INSTALLED UNDER SEPARATE SECTION)
- FSD — FIRE SMOKE DAMPER (INSTALLED UNDER SEPARATE SECTION)
- EOL — END-OF-LINE DEVICE
- J — JUNCTION BOX
- FIRE ALARM CONDUIT (3/4-INCH UNLESS OTHERWISE NOTED)
- FIRE ALARM CIRCUIT IDENTIFICATION
  - L1/L2 — 1-PAIR; SLC/IDC LOOP (L1 THROUGH L14)
  - A1 — 1 PAIR #14; AUDIBLE NAC CIRCUIT (A1 THROUGH A8)
  - V1/V2/V3 — 1 PAIR #14; VISUAL NAC CIRCUIT (V1 THROUGH V20)
  - RCC — 1 RS232 FOR REMOTE ANNUNCIATION
  - (TYPICAL UND) TYPICAL UNLESS NOTED OTHERWISE

PROFESSIONAL SEAL (IF REVISION, APPLIES ONLY TO REVISED WORK)	ISSUE (PROGRESS, ESTIMATE, BID, CONSTRUCTION, CONFORMED, REVISION, RECORD)	REVISION NUMBER	DRAWN BY	CHECKED BY	APPR'D BY	DATE	REMARKS
	AS BUILT 06/14/13	–	DSV	LDD	MCD	6/14/13	AS BUILT PER FIELD VERIFICATION

BLDG-67 FIRE ALARM
RISER DIAGRAM-INITIATING DEVICES.

UNIVERSITY OF CALIFORNIA
LAWRENCE BERKELEY NATIONAL LABORATORY
FACILITIES DIVISION

DRAWN BY	DSV	DATE 06/14/2013
CHECKED BY	LDD	7/8/2013
APPROVED BY	MCD	7/8/2013
SCALE		
DRAWING NO.	4B67E151	SHEET 4
PROJECT NO.	FN1438	4 OF 21