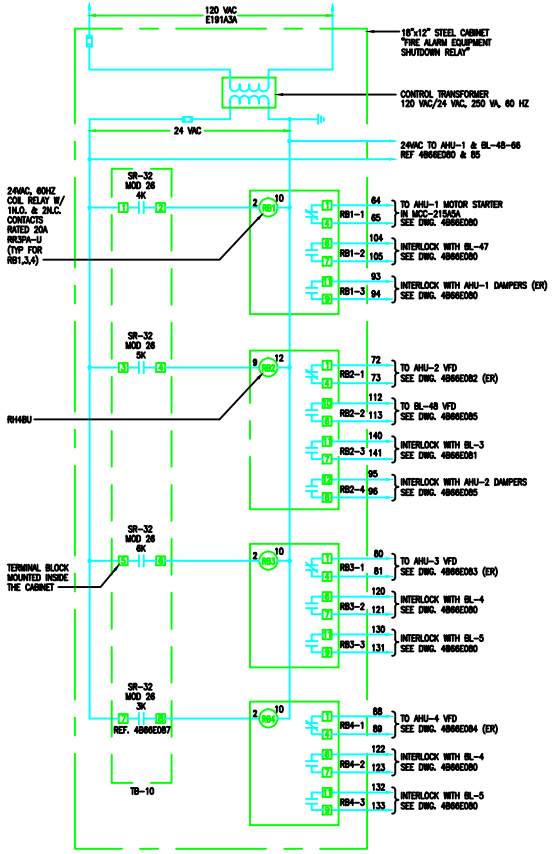

RELAY CABINET (RC #1)
FIRE ALARM EQUIPMENT SHUTDOWN WIRING DIAGRAM 1

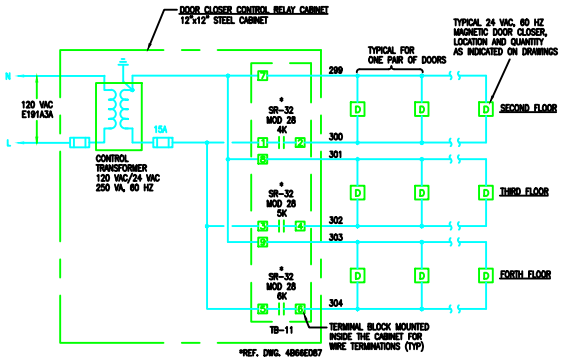

DOOR CLOSER WIRING DIAGRAM 2

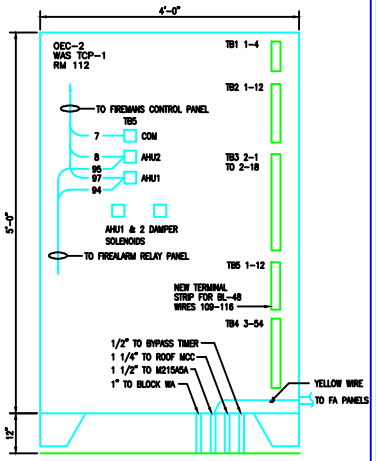

OEC CABINET 3

B	ROB	MCG	MCG	11/12/97	AS-BUILT
A	ROB	MCG	MCG	4/08/97	ISSUE FOR FIELD VERIFICATION
REVISION NO.	DRAWN BY	CHECKED BY	APPVD BY	DATE	REMARKS

66 BLDG FIRE ALARM
DOOR CLOSER & SHUTDOWN
RELAY WIRING DIAGRAM & DETAIL

UNIVERSITY OF CALIFORNIA LAWRENCE BERKELEY LABORATORY
FACILITIES DEPARTMENT

DRAWN BY	LM	DATE 03/20/97
CHECKED BY	ROB	06/03/97
APPROVED BY	MCG	06/03/97
CAD FILE PATH	00002898	
SCALE	As Noted	
DRAWING NO.	4B66E089B	SHEET E11
PROJECT NO.	120362	1 OF 1