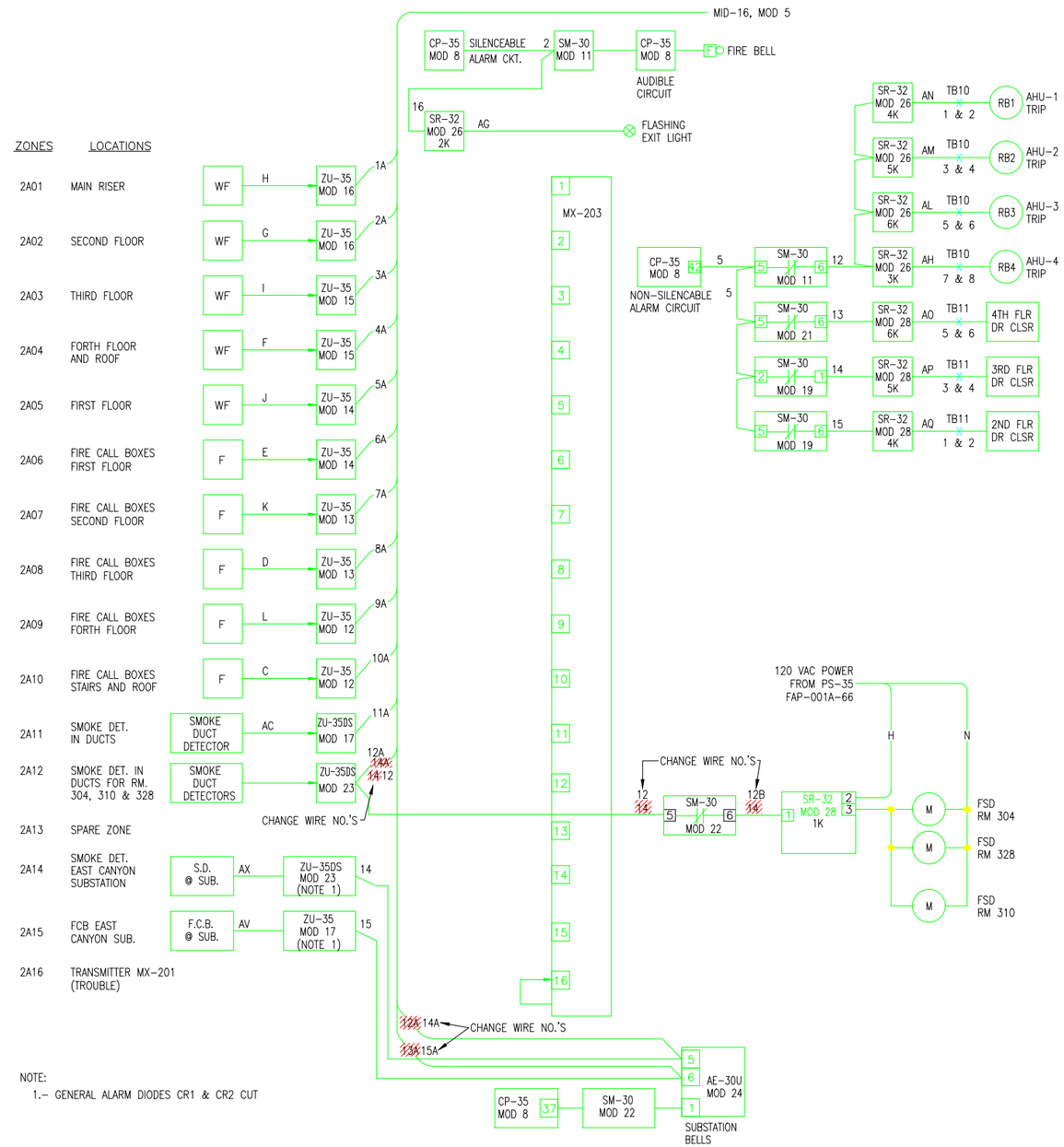

TRANSMITTER 201

REF. DWG. 4B66E055

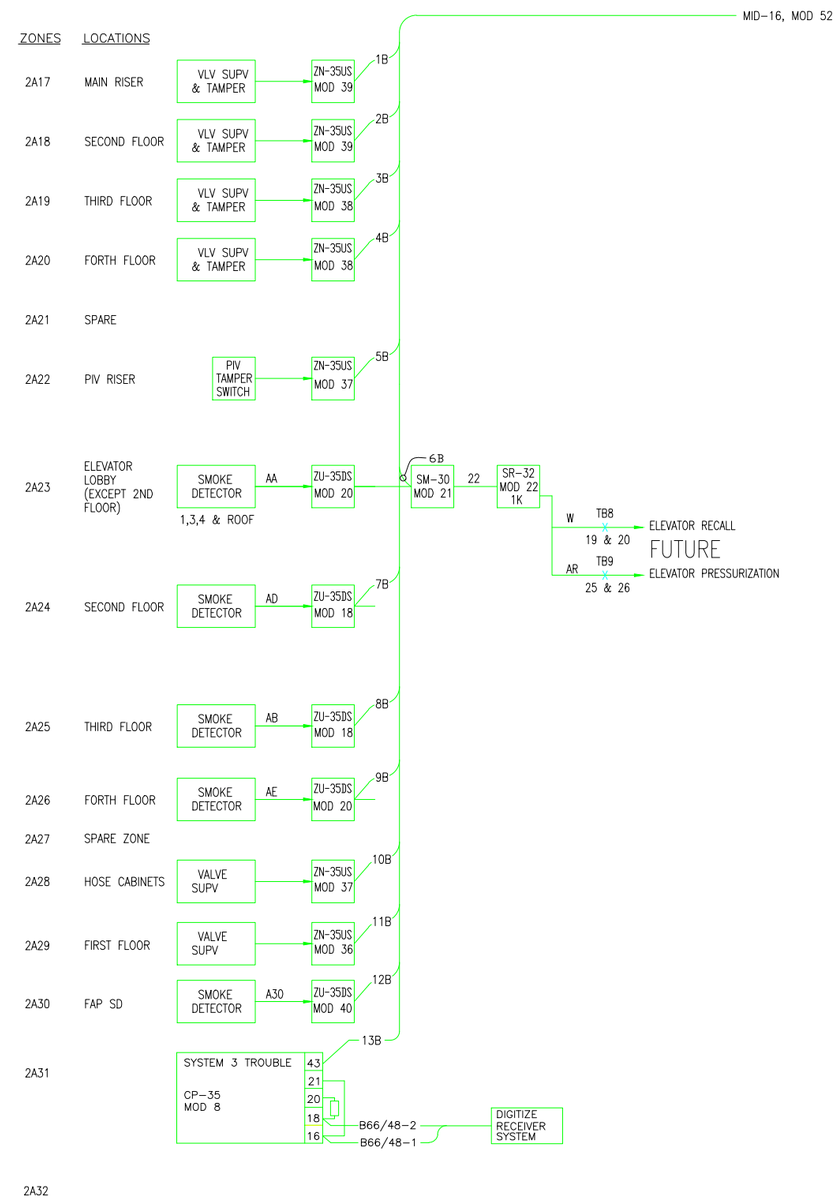

TRANSMITTER 202

I				5/15/09	AS BUILT		
H				9/30/08	AS BUILT		
G	AD	MCG	MCG	4/13/05	REVISED FOR MXL/DIGITIZE SYSTEMS		
F	HYT	HYT	MCG	2/16/05	MOLE FOUNDRY RAMP UP AS-BLT FM4100		
E	MRC	MCG	MCG	8/18/03	AS-BUILT PHASE II FIRE ALARM UPGRADE		
D	AD	MCG	MCG	6/27/03	PHASE II FIRE ALARM SYSTEM UPGRADE		
C	HYT	HYT	–	3/20/02	REPLACEMENT FIRE ALARM PROJECT		
PROFESSIONAL SEAL (IF REVISION, APPLIES ONLY TO REVISED WORK)	ISSUE (PROGRESS, ESTIMATE, BID, CONSTRUCTION, CONFORMED, REVISION, RECORD)	REVISION NUMBER	DRAWN BY	CHECKED BY	APPR'D BY	DATE	REMARKS

AS BUILT REVISION | 05/15/2009

66 BLDG FIRE ALARM

TRANSMITTER 201 & 202

LOGIC DIAGRAMS

UNIVERSITY OF CALIFORNIA
LAWRENCE BERKELEY NATIONAL LABORATORY
FACILITIES DIVISION

DRAWN BY	LM	DATE 3/20/199
CHECKED BY	ROB	6/3/1997
APPROVED BY	MCG	6/25/199
CAD FILE PATH	00019243	
SCALE	As Noted	
DRAWING NO.	4B66E0871	SHEET 1 OF 1
PROJECT NO.	120362	