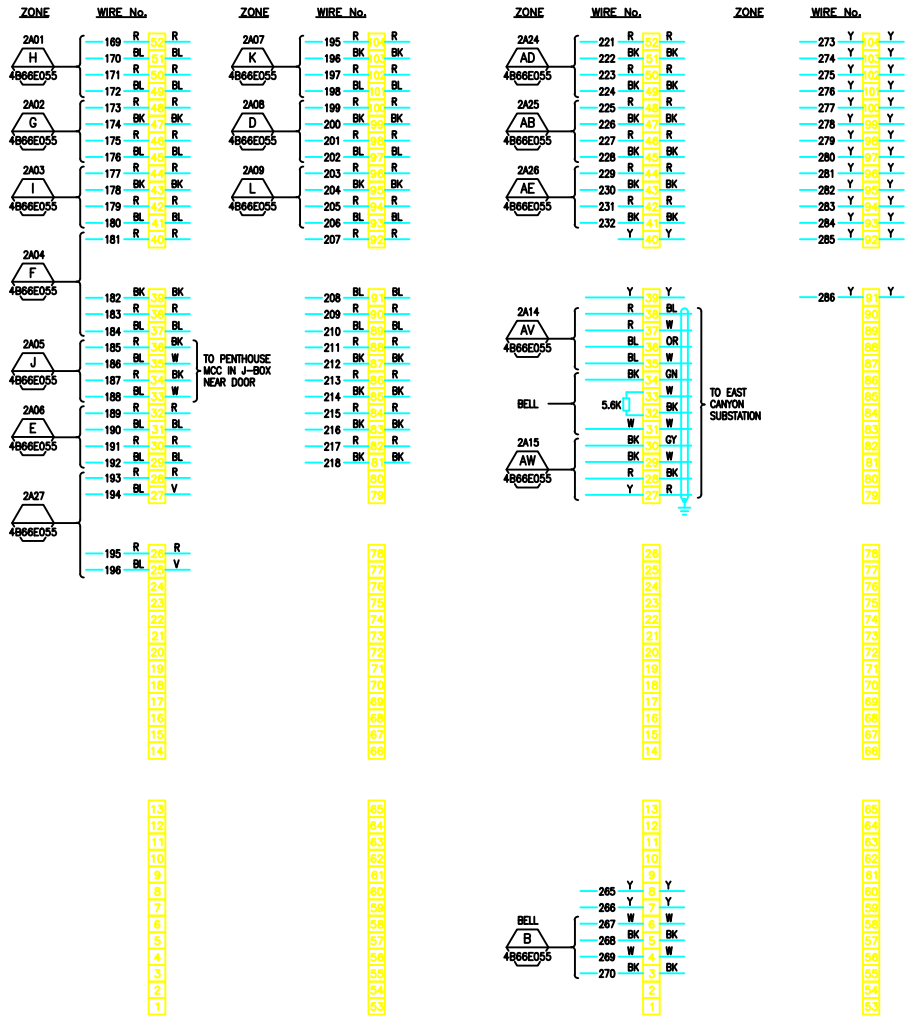

TERMINAL STRIP CAN #1 DETAIL (1)

TERMINAL STRIP CAN #2 DETAIL (2)

REFERENCE DWGS:

4B66E090 FOR DEVICE CONNECTIONS
4B66E090 FOR LOGIC DIAGRAM

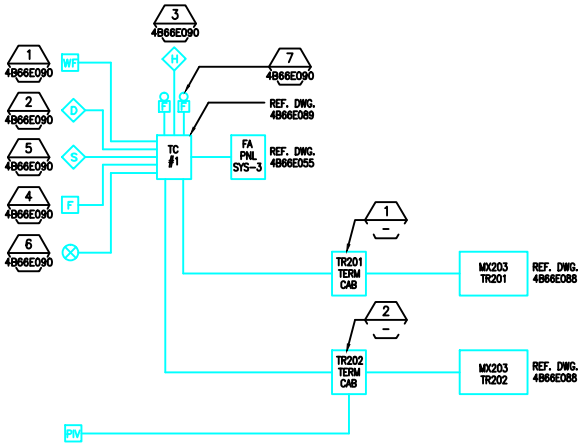

FIRE ALARM CONTROL SYSTEM BLOCK DIAGRAM

SEE NOTES

REVISION NUMBER	DRAWN BY	REVIEWED BY	APPROVED BY	DATE	REMARKS
B	ROB	MCG	MCG	11/11/97	AS-BUILT
A	ROB	MCG	MCG	4/24/97	ADD SMOKE CONTROL, ISSUE FOR ESTIMATING

66 BLDG FIRE ALARM EQUIPMENT ELEVATIONS, RISER & TERMINAL BLOCK DIAGRAMS

UNIVERSITY OF CALIFORNIA LAWRENCE BERKELEY LABORATORY
FACILITIES DEPARTMENT

		DATE
DRAWN BY	LM	03/20/97
CHECKED BY	ROB	06/03/97
APPROVED BY	MCG	06/03/97
CAD FILE PATH	00002991	
SCALE	As Noted	
DRAWING NO.	4B66E086B	SHEET E8
PROJECT NO.	120362	1 OF 1