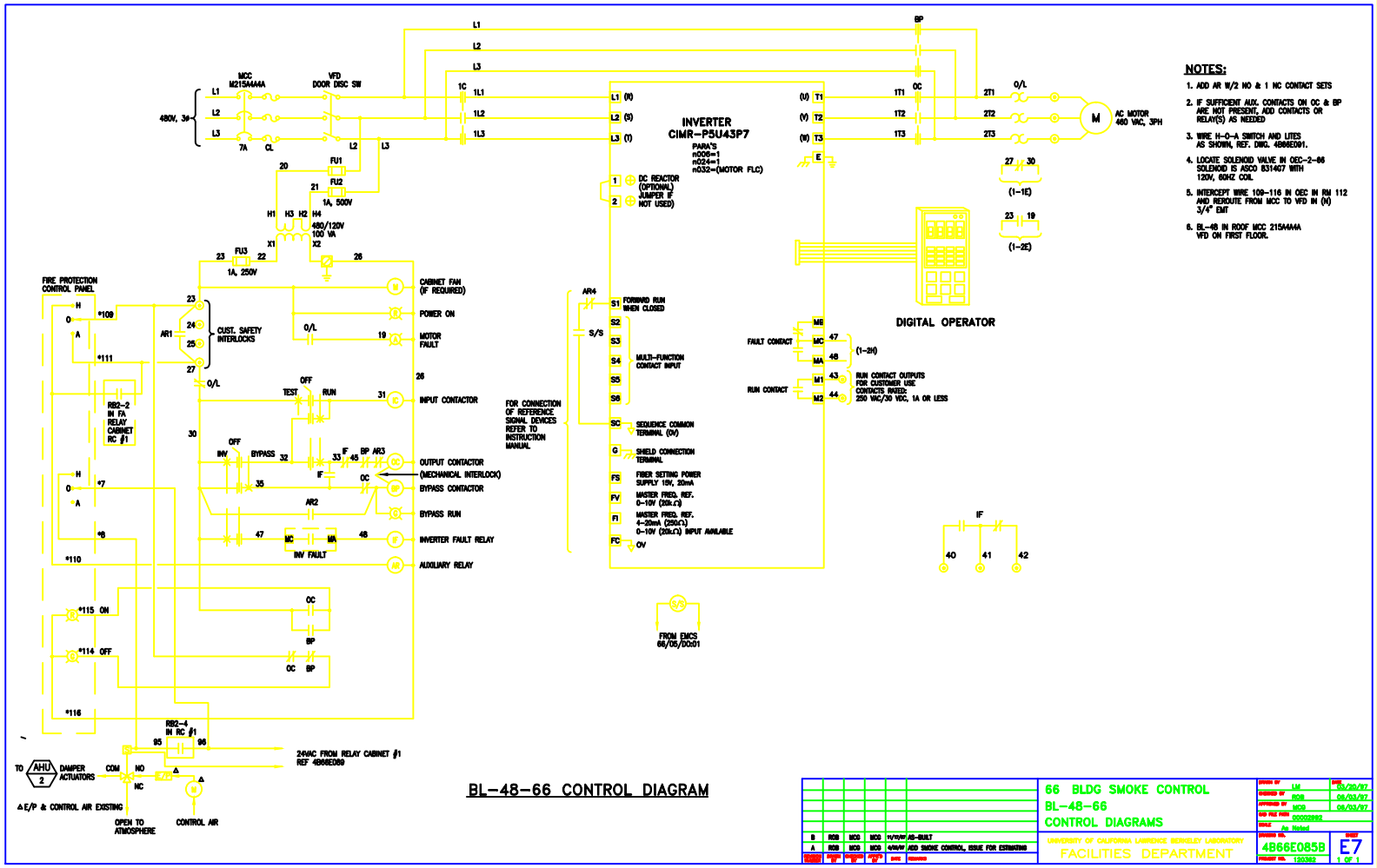

NOTES:

1. ADD AR W/2 NO & 1 NC CONTACT SETS
2. IF SUFFICIENT AUX. CONTACTS ON OC & BP ARE NOT PRESENT, ADD CONTACTS OR RELAY(S) AS NEEDED
3. WIRE H-O-A SWITCH AND LITES AS SHOWN, REF. DWG. 4B66E091.
4. LOCATE SOLENOID VALVE IN OEC-2-66 SOLENOID IS ASCO 831407 WITH 120V, 60HZ COIL.
5. INTERCEPT WIRE 109-116 IN OEC IN RM 112 AND REROUTE FROM MCC TO VFD IN (N) 3/4" EMT
6. BL-48 IN ROOF MCC 215M4M4 VFD ON FIRST FLOOR.

BL-48-66 CONTROL DIAGRAM

B	RDB	MDB	MDB	11/19/97	AS-BUILT
A	RDB	MDB	MDB	4/24/97	ADD SMOKE CONTROL, ISSUE FOR ESTIMATING

66 BLDG SMOKE CONTROL
BL-48-66
CONTROL DIAGRAMS

UNIVERSITY OF CALIFORNIA LAWRENCE BERKELEY LABORATORY
FACILITIES DEPARTMENT

DRAWN BY	LM	05/20/97
DESIGNED BY	RDB	06/03/97
APPROVED BY	MDB	06/03/97
CAD FILE NAME	00002992	
SCALE	As Noted	
DRAWING NO.	4B66E085B	SHEET E7
PROJECT NO.	120362	1 OF 1