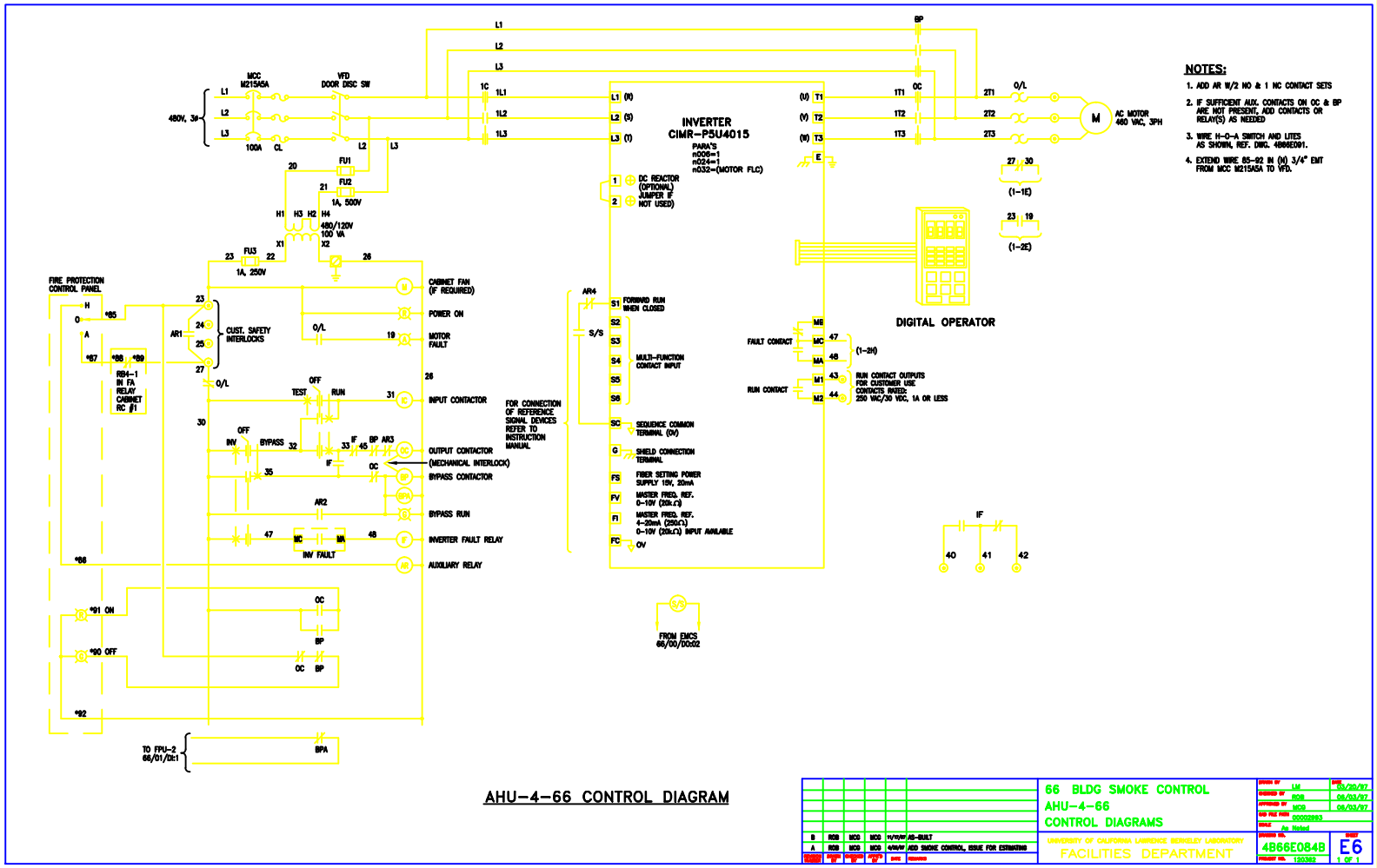

NOTES:

1. ADD AR W/2 NO & 1 NC CONTACT SETS
2. IF SUFFICIENT AUX. CONTACTS ON OC & BP ARE NOT PRESENT, ADD CONTACTS OR RELAY(S) AS NEEDED
3. WIRE H-O-A SWITCH AND LITES AS SHOWN, REF. DWG. 4B66E091.
4. EXTEND WIRE 85-92 IN (N) 3/4" EMT FROM MCC M215A5A TO VFD.

AHU-4-66 CONTROL DIAGRAM

B	RDB	MCB	MCB	11/19/97	AS-BUILT
A	RDB	MCB	MCB	4/24/97	ADD SMOKE CONTROL, ISSUE FOR ESTIMATING

66 BLDG SMOKE CONTROL
AHU-4-66
CONTROL DIAGRAMS

UNIVERSITY OF CALIFORNIA LAWRENCE BERKELEY LABORATORY
FACILITIES DEPARTMENT

DRAWN BY	LM	05/20/97
DESIGNED BY	RDB	06/03/97
APPROVED BY	MCB	06/03/97
CAD FILE NAME	00002993	
SCALE	As Noted	
DRAWING NO.	4B66E084B	SHEET E6
PROJECT NO.	120362	1 OF 1