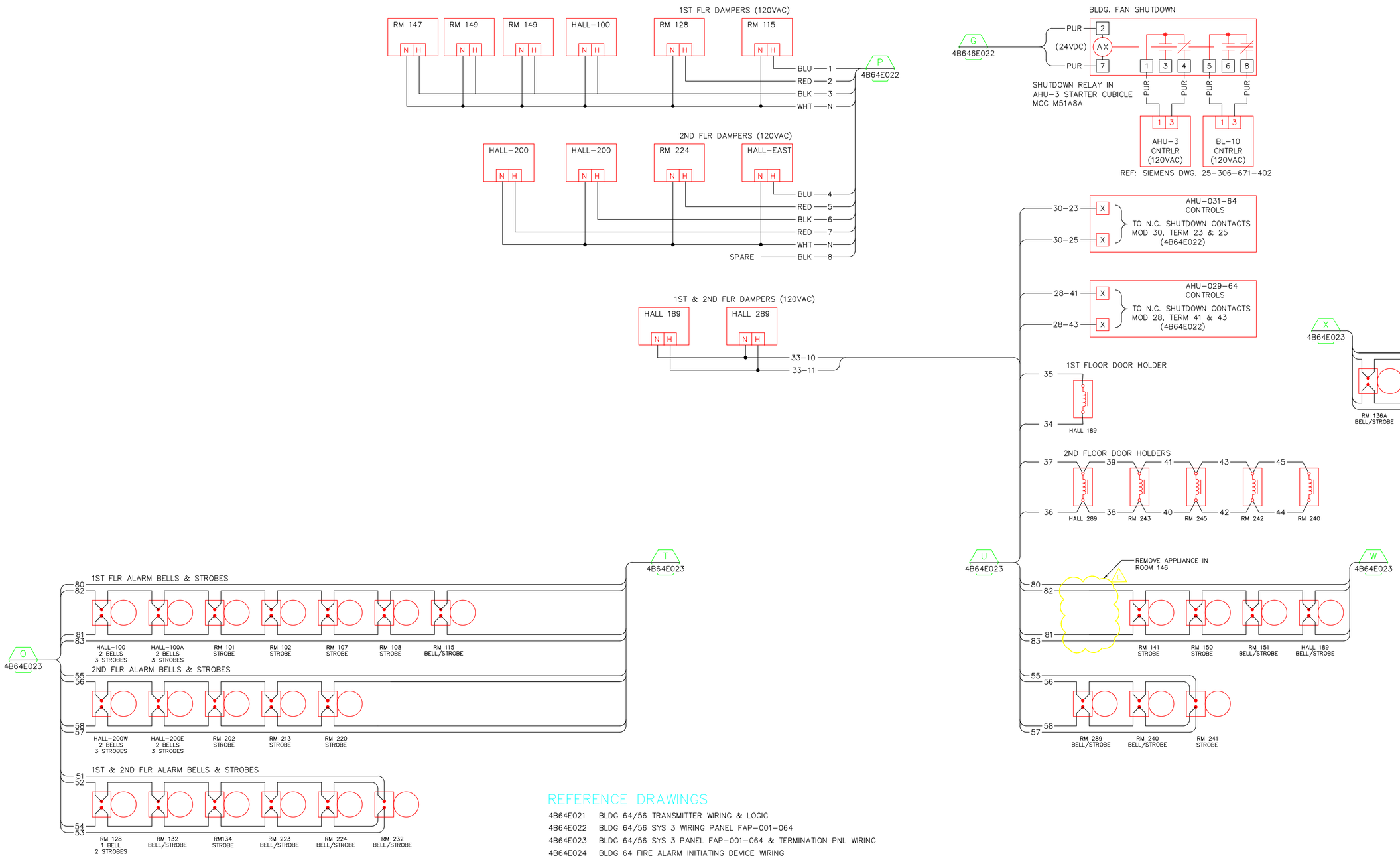

REFERENCE DRAWINGS

4B64E021	BLDG 64/56 TRANSMITTER WIRING & LOGIC
4B64E022	BLDG 64/56 SYS 3 WIRING PANEL FAP-001-064
4B64E023	BLDG 64/56 SYS 3 PANEL FAP-001-064 & TERMINATION PNL WIRING
4B64E024	BLDG 64 FIRE ALARM INITIATING DEVICE WIRING
4B56E002	BLDG 56 FIRE ALARM DEVICE WIRING
4B64E105	BLDG 64/56 SYSTEM 3 PANEL FAP-002-64

DISTRIBUTION:

2 – ELECTRIC SHOP – B76 (FILE I & II)
1 – B90J (FILE III)
1 – STICK FILE – B90J
ORIGINAL – B90F FLAT FILE

ASBUILT
REVISION
F
4/9/2005

PROFESSIONAL SEAL (IF REVISION, APPLIES ONLY TO REVISED WORK)

ISSUE (PROGRESS, ESTIMATE, BID, CONSTRUCTION, CONFORMED, REVISION, RECORD)	REVISION NUMBER	DRAWN BY	CHECKED BY	APPR'D BY	DATE	REMARKS
	F	RZT	MCG	MCG	4/09/05	AS BUILT ISSUED FM3001
	E	HYT	HYT	–	7/14/05	FM3001 RECORD PRINTS
	D	HYT	HYT	–	9/10/03	EXPANSION PROJECT FM3001
	C	LDD	LDD	MCG	7/19/01	AS-BUILT – PROJ FM9310
	B	LDD	LDD	MCG	7/23/99	CONSTRUCTION – PROJ FM9310
	A	LDD	LDD	MCG	7/23/99	F.O. REVISION – PROJ FM9310

64
FIRE ALARM SYSTEM
ALARM/ACTIVATION DEVICE WRG

UNIVERSITY OF CALIFORNIA
LAWRENCE BERKELEY NATIONAL LABORATORY
FACILITIES DIVISION

DRAWN BY LDD	DATE 5/7/1999	
CHECKED BY LDD	5/7/1999	
APPROVED BY MCG	5/10/1999	
CAD FILE PATH 00019321		
SCALE As Noted		
DRAWING NO. 4B64E084F	SHEET FA2.8	
PROJECT NO. FM9210	1 OF1	