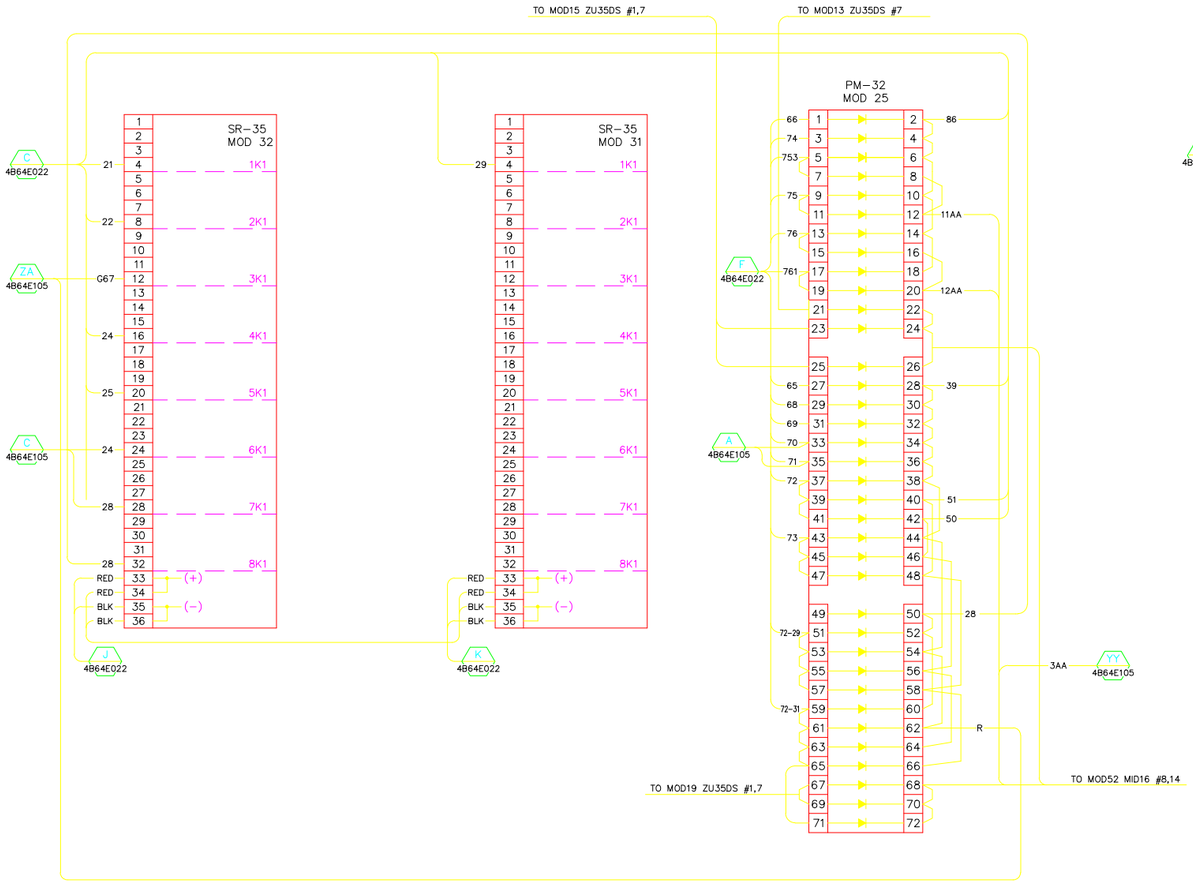

FIRE ALARM CONTROL PANEL FAP-1-64

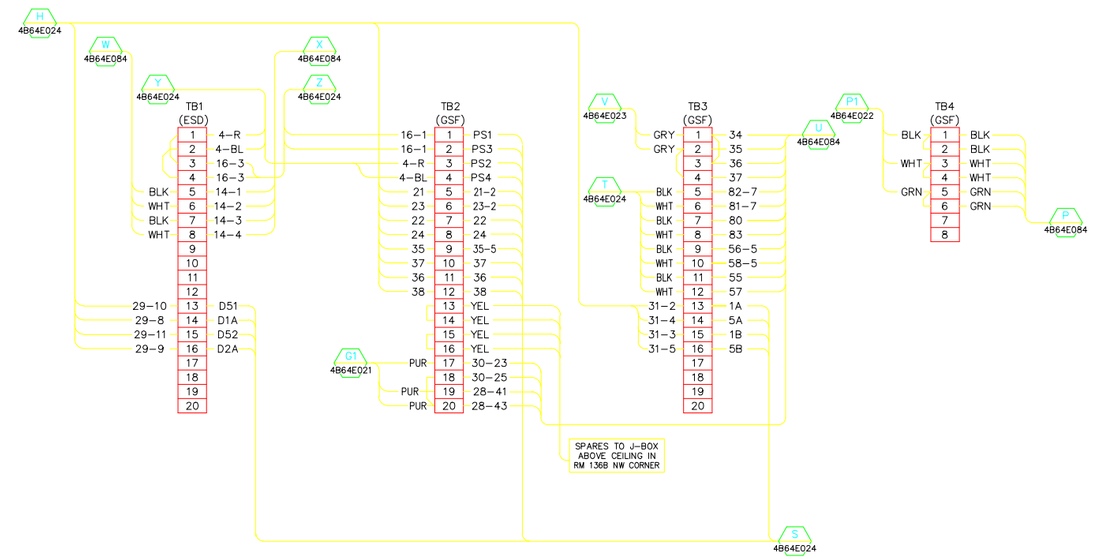

FIRE ALARM TERMINATION PANEL IN ROOM 140

REFERENCE DRAWINGS

4B64E021 BLDG 64/56 TRANSMITTER LOGIC & WIRING
4B64E022 BLDG 64/56 SYS 3 WIRING PANEL FAP-001-064
4B64E024 BLDG 64 FIRE ALARM SYS DEVICE WIRING
4B64E084 BLDG 64 FIRE ALARM ALARM/ACTIVATION DEVICE WIRING
4B56E002 BLDG 56 FIRE ALARM SYS DEVICE WIRING
4B64E105 BLDG 64/56 SYSTEM 3 PANEL FAP-002-64

ISSUE (PROGRESS, ESTIMATE, BID, CONSTRUCTION, CONFORMED, REVISION, RECORD)	REVISION NUMBER	DRAWN BY	CHECKED BY	APPR'D BY	DATE	REMARKS
TITLE 2 CONSTRUCTION H 05/15/2009	H				5/15/09	AS-BUILT
	G	RZT	MCG	MCG	4/09/05	REVISED FOR MXL/DIGITIZE SYSTEM
	F	HYT	HYT	–	8/24/04	PROJECT FM3001 RECORD PRINTS
	E	HYT	HYT	–	6/22/04	PROJECT FM3001 MODIFICATIONS
	D	HYT	HYT	–	9/10/03	EXPANSION PROJECT FM3001
	C	LDD	LDD	MCG	7/19/01	AS-BUILT- FIELD CORRECTIONS
	B	LDD	LDD	MCG	8/30/00	AS-BUILT- PROJ FM9210

PROFESSIONAL SEAL (IF REVISION, APPLIES ONLY TO REVISED WORK)

64 /56 FA SYSTEM
SYSTEM 3 WIRING-PNL FAP-1-64
& TERM PANEL WIRING

UNIVERSITY OF CALIFORNIA
LAWRENCE BERKELEY NATIONAL LABORATORY
FACILITIES DIVISION

DRAWN BY	LDD	DATE	3/6/1997
CHECKED BY	LDD		3/6/1997
APPROVED BY	MCG		3/11/199
CAD FILE PATH			
SCALE	As Noted		
DRAWING NO.	4B64E023H	SHEET	FA
PROJECT NO.	120700		1 OF 1