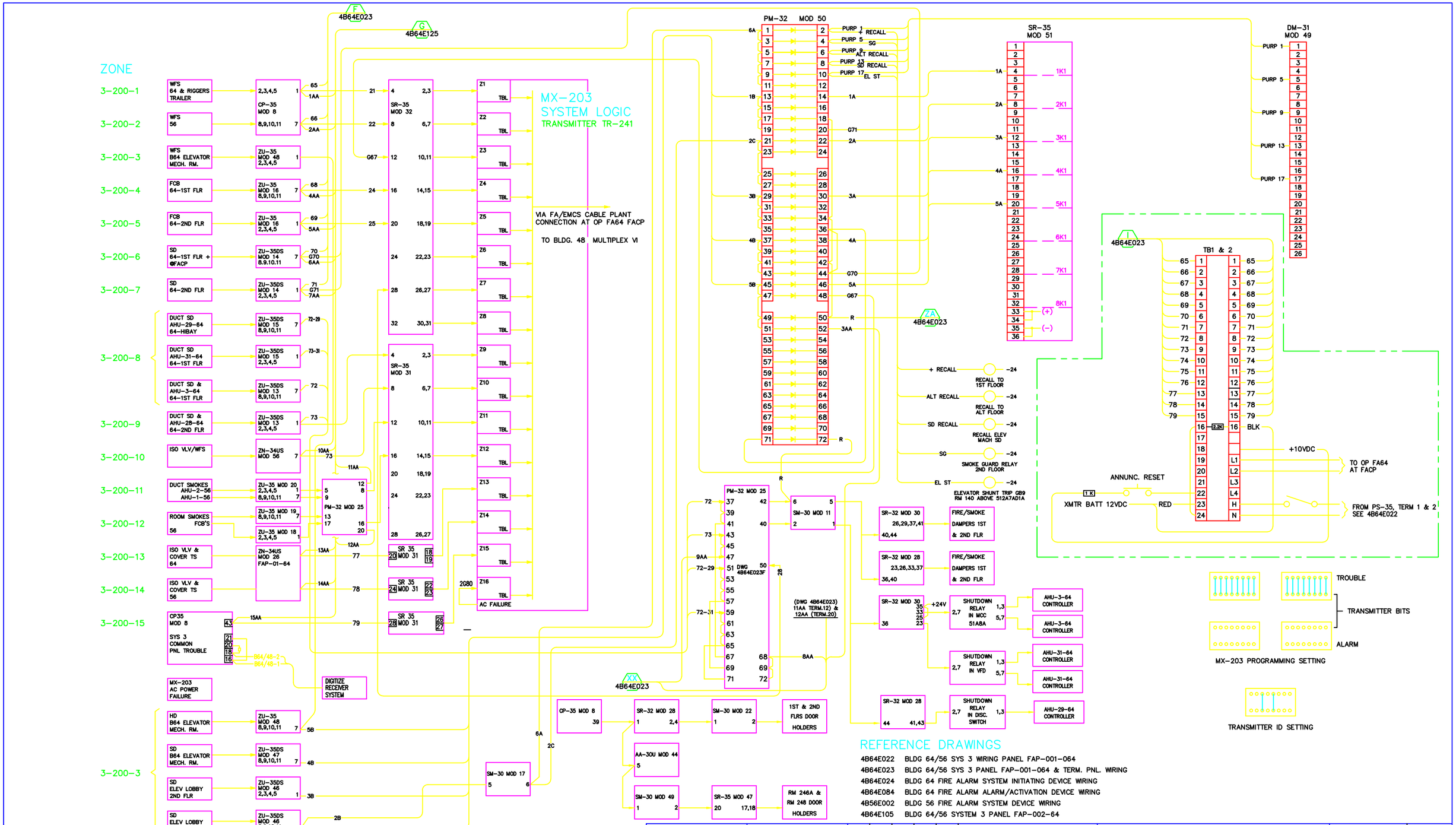

AS BUILT
H
5/29/13

REVISION NUMBER	DRAWN BY	CHECKED BY	APPR'D BY	DATE	REMARKS
H	DSV	LDD	MCD	5/24/13	AS BUILT PER FIELD VERIFICATION
G	RZT	MCG	MCG	4/09/05	REVISED FOR MXL/DIGITIZE SYSTEM
F	HYT	HYT	–	2/14/05	PROJECT FM3001 RECORD PRINTS
E	HYT	HYT	–	8/24/04	PROJECT FM3001 MODIFICATIONS
D	HYT	HYT	–	9/10/03	EXPANSION PROJECT FM3001
C	LDD	LDD	MCG	4/4/00	AS-BUILT – PROJECT FM9210
B	LDD	LDD	MCG	7/23/99	CONSTRUCTION – PROJECT FM9310

PROFESSIONAL SEAL (IF REVISION, APPLIES ONLY TO REVISED WORK)

ISSUE (PROGRESS, ESTIMATE, BID, CONSTRUCTION, CONFORMED, REVISION, RECORD)

64 FIRE ALARM SYSTEM
MX 203, TRANSMITTER 241
LOGIC & WIRING DIAGRAM

UNIVERSITY OF CALIFORNIA
LAWRENCE BERKELEY NATIONAL LABORATORY
FACILITIES DIVISION

DRAWN BY	LDD	DATE 3/10/1997
CHECKED BY	LDD	3/10/1997
APPROVED BY	MCG	3/11/1997
CAD FILE PATH		
SCALE	As Noted	
DRAWING NO.	4B64E021H	SHEET FA2.4
PROJECT NO.	120700	1 OF 1