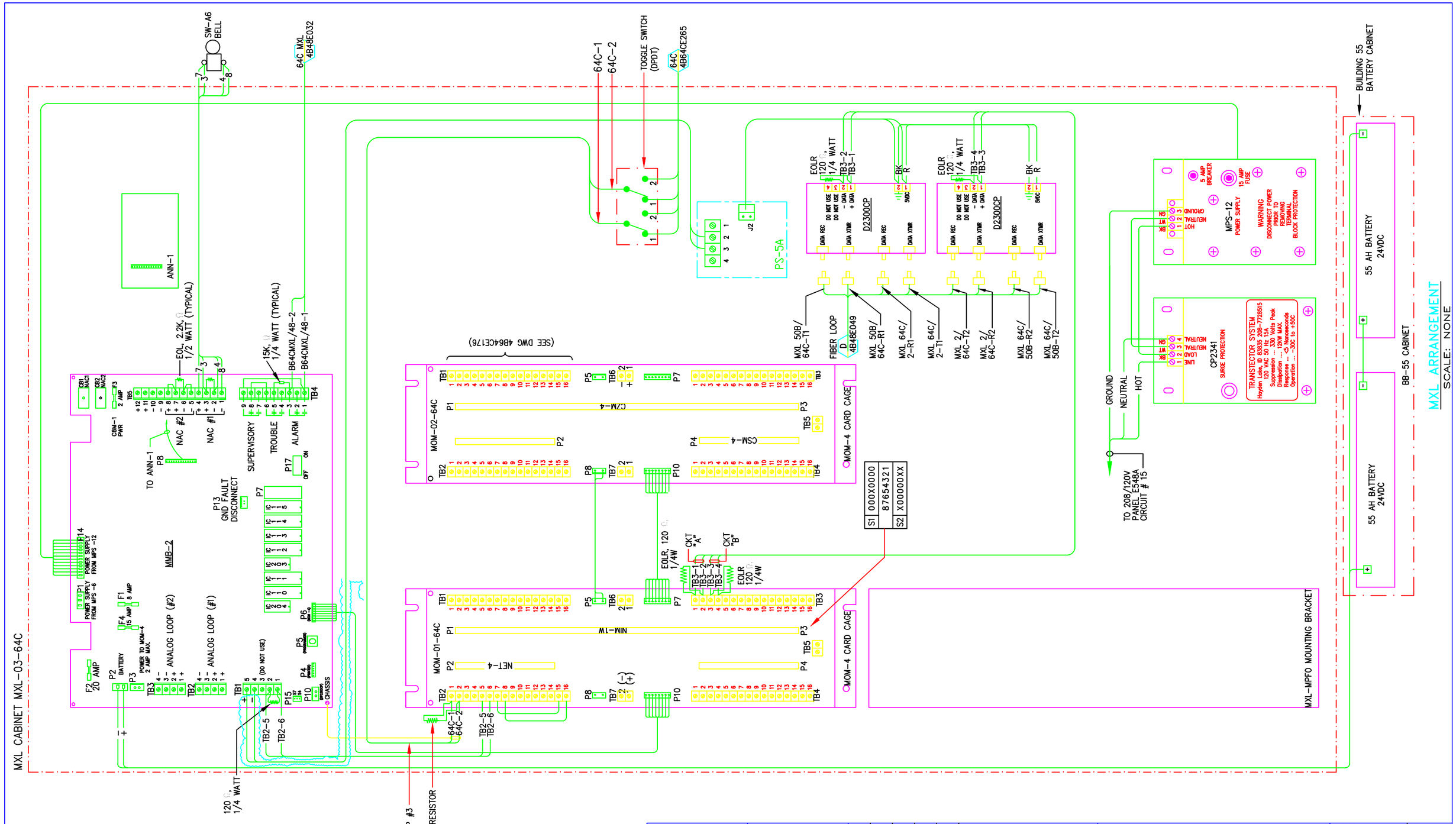


AS BUILT

D
6/3/13

| REVISION NUMBER | DRAWN BY | CHECKED BY | APPR'D BY | DATE | REMARKS |
|---|---|---|---|---|---|
| D | DSV | LDD | MCD | 5/31/13 | AS BUILT PER FIELD VERIFICATION |
| C | AD | LDD | MCD | 03/09/06 | REVISED FOR MXL COPPER LOOP |
| B | AD | MCG | MCG | 12/05/05 | REVISED PER SIEMENS REVIEW |
| A | AD | MCG | MCG | 06/14/05 | REVISED FOR MXL INSTALLATION |

PROFESSIONAL SEAL (IF REVISION, APPLIES ONLY TO REVISED WORK)

ISSUE (PROGRESS, ESTIMATE, BID, CONSTRUCTION, CONFORMED, REVISION, RECORD)

64C FIRE ALARM
MXL FIRE ALARM SYSTEM, LOOP 3
MXL #3 FAP ARRANGEMENT/WIRING DIAG

UNIVERSITY OF CALIFORNIA
LAWRENCE BERKELEY NATIONAL LABORATORY
FACILITIES DIVISION

| | | DATE |
|---|---|---|
| DRAWN BY | AD | 7/26/2004 |
| CHECKED BY | AD | 7/26/2004 |
| APPROVED BY | MCG | 7/26/3004 |
| CAD FILE PATH | | |
| SCALE | Full | |
| DRAWING NO. | 4B64CE174D | SHEET 1 OF 1 |
| PROJECT NO. | FE5200 | |