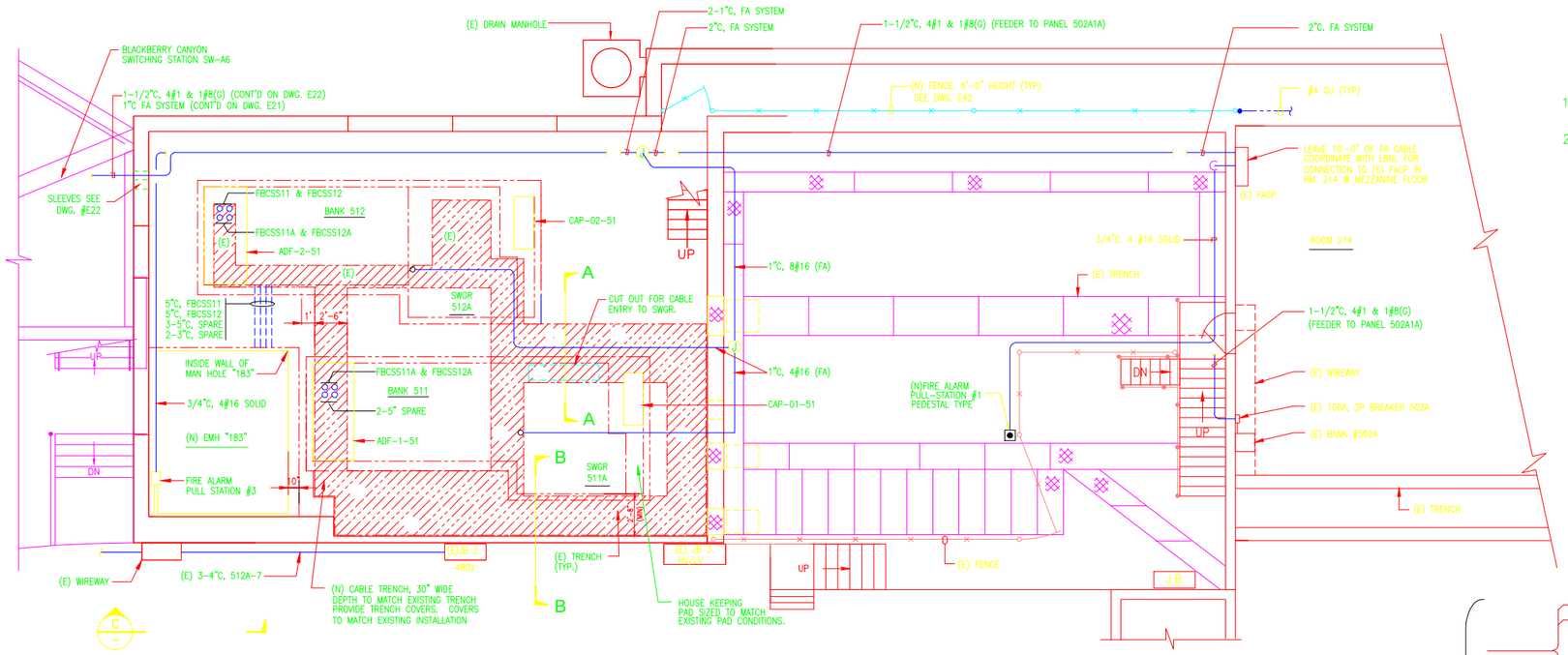

B51 SUBSTATION LIGHTING & FIRE ALARM PLAN

SCALE : 3/16" = 1'-0"

NOTES

1. RECONNECT (E) AREA LIGHTS TO (N) LIGHTING PANEL OF BANK 512
2. PROVIDE RACEWAY SYSTEM ONLY FOR EMCS AND TELEPHONE SYSTEM. SEE DWG. E42 FOR EMCS AND TELEPHONE SYSTEM.

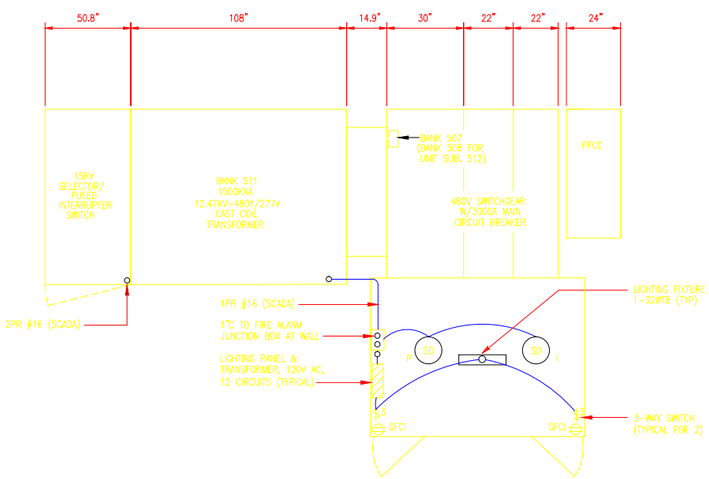

LIGHTING & FIRE ALARM DETAIL

N.T.S. (TYPICAL FOR BANK 511 & 512)

1 / -

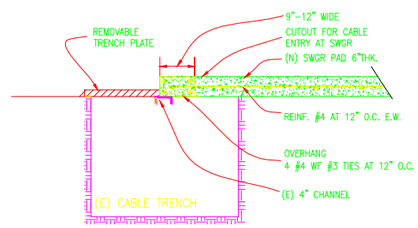

SECTION A-A

N.T.S.

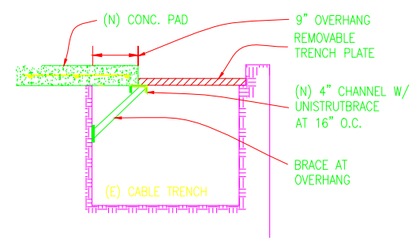

SECTION B-B

N.T.S.

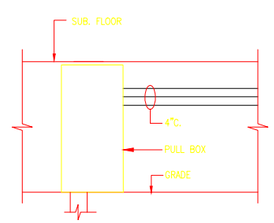

ELEVATION

N.T.S.

C / -

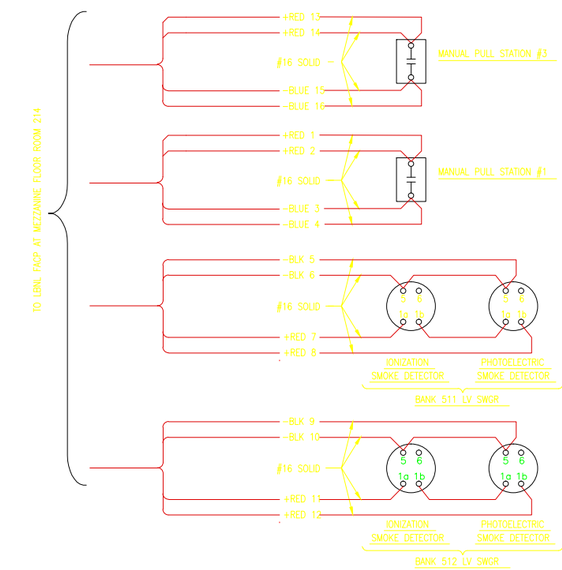

FIRE ALARM DEVICE WIRING

N.T.S.

B / -

YEI ENGINEERS, INC.
7700 Edgewater Drive, Suite 828, Oakland Ca 94621
Phone: 510-383-1050 Fax: 510-383-1050

CHANGE LETTER	DRAWN BY	CHECK BY	APPR. BY	DATE	REVISIONS
D	MRC	MG	MG	9/2001	NEW LAYOUT OF UNITS SWITCBOARDS
C	SH	B.F.	L.L.	2/99	REVISED FOR REBID OF CONST. PACKAGE
B	U.T.	B.F.	L.L.	1/99	REVISED FOR REBID OF CONST. PACKAGE

ELECTRICAL SYSTEM REHABILITATION
BLACKBERRY CANYON AREA
BUILDING 51 SUBSTATION
ELECTRICAL EQUIPMENT ARRANGEMENT
UNIT SUBSTATION REPLACEMENT PROJECT

UNIVERSITY OF CALIFORNIA LAWRENCE BERKELEY NATIONAL LABORATORY
FACILITIES DEPARTMENT

DRAWN BY	U.T.	DATE 98
CHECKED BY	G.W.	98
APPROVED BY	L.L.	98
CAD FILE PATH	U:\DWGFILES\ELEC\64C\FE2001\00013568	
SCALE	NONE	
DRAWING NO.	4B64CE039D	SHEET E40
PROJECT NO.	FE2001	OF

9719B (E40) 10/9/98