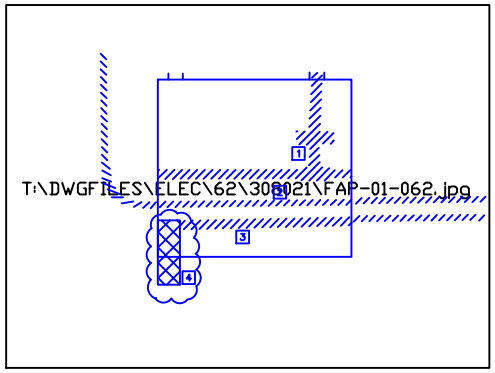

1 62 FIRE ALARM DEMO PLAN
1-1/2"=1'-0"

DEMOLITION NOTES

1. (R) REMOVE AND RELOCATE (E) FIRE ALARM A.C. CONDUIT
2. (R) REMOVE AND RELOCATE (E) EMCS DATA CONDUIT
3. (R) REMOVE AND RELOCATE (E) EMCS A.C. CONDUIT
4. (R) REMOVE AND RELOCATE (E) UTILITY OUTLET

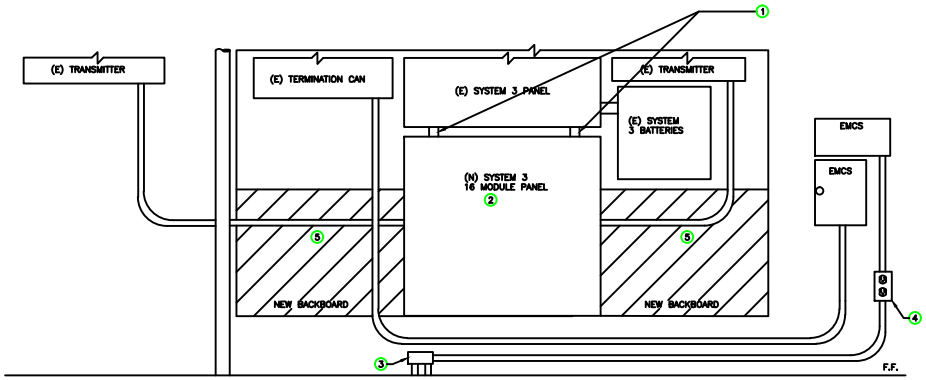

2 62 FIRE ALARM NEW EQUIPMENT INSTALLATION
1-1/2"=1'-0"

INSTALLATION NOTES

1. (N) 2" GUTTER NIPPLES CONNECTING SYSTEM 3 PANELS
2. (N) 16 MODULE SYSTEM 3 PANEL MOUNTED BELOW EXISTING UNIT.
3. (N) JB OVER EXISTING STUB UP CONDUITS AND RE-ROUTE A.C. TO EMCS.
4. (N) RELOCATED DUPLEX OUTLET 12" MINIMUM ABOVE F.F.
5. (N) EXTEND FIRE RETARDENT BACKBOARD FOR SYSTEM 3 EXPANSION PANEL AS SHOWN. SIZE AND PAINT TO MATCH.

REFERENCE DRAWINGS

1. 4B62E011 BLDG 62 FIRE ALARM SYSTEM SYS 3 WIRING DIAGRAM
2. 4B62E024 BLDG 62 FIRE ALARM SYSTEM TX 113, 114 ZONE WIRING DIAGRAM
3. 4B62E057 BLDG 62 FIRE ALARM SYSTEM LOGIC DIAGRAM
4. 4B62E058 BLDG 62 FIRE ALARM SYSTEM 1ST FLOOR & 62A INIT / ALARM DEVICES
5. 4B62E059 BLDG 62 FIRE ALARM SYSTEM 2ND FLOOR INIT / ALARM DEVICES
6. 4B62E060 BLDG 62 FIRE ALARM SYSTEM 3RD FLOOR INIT / ALARM DEVICES
7. 4B62E061 BLDG 62 FIRE ALARM SYSTEM ELEV & MISC INIT / ALARM DEVICES

DISTRIBUTION LIST:

2-ELECTRIC SHOP B76 (FILE I & II)
1-B90J (FILE III)
1-STICK FILE B90J
ORIGINAL-FLAT FILE B90F

PROFESSIONAL SEAL (IF REQUIRED, APPLIED ONLY TO REVISED DWGS)	T-ii Bid/jo 04/18/01	REVISION NUMBER	DRAWN BY	CHECKED BY	APPR'D BY	DATE	REMARKS	62 FIRE ALARM SYSTEM SYSTEM 3 BACKBOARD DEMO DEMO PLAN	DRAWN BY GMS	DATE 04/18/01
									CHECKED BY MCG	
									APPROVED BY MCG	
									CAD FILE PATH 00012209	
									SCALE As Noted	
								UNIVERSITY OF CALIFORNIA LAWRENCE BERKELEY NATIONAL LABORATORY FACILITIES DEPARTMENT	DRAWING NO. 4B62E062_	SHEET
									PROJECT NO. 308021	OF