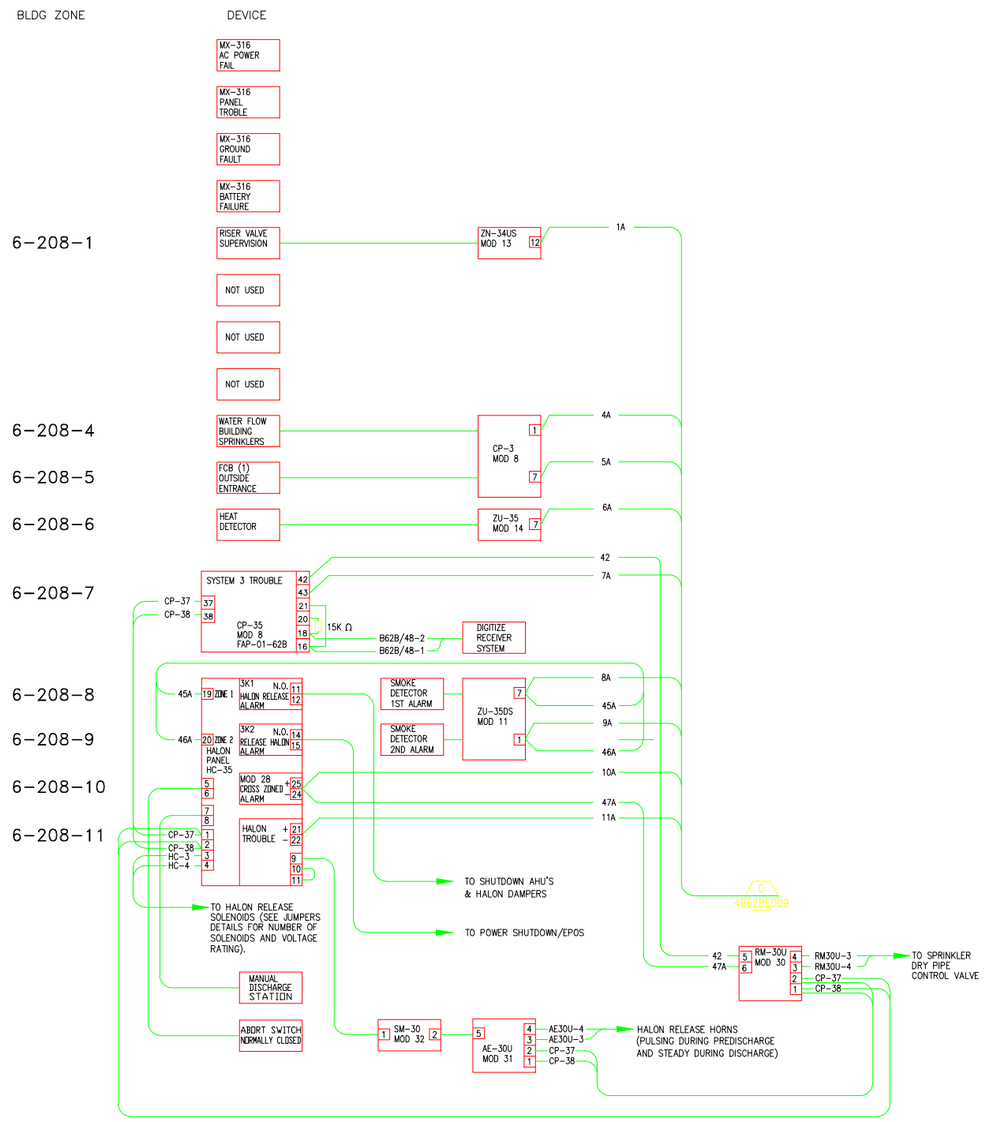

LOGIC DIAGRAM

NUMBER OF DISCHARGE DEVICES	JUMPER ACROSS R74, R75, R76
1-6V DC SOLENOID	CUT JUMPERS G1, G2 & G3
2-6V DC SOLENOID	CUT JUMPERS G1, & G2
3-6V DC SOLENOID	CUT JUMPERS G1
4-6V DC SOLENOID	NO JUMPERS CUT
1-24V DC SOLENOID	NO JUMPERS CUT

JUMPER DETAILS

REVISION NUMBER	DRAWN BY	CHECKED BY	APPR'D BY	DATE	REMARKS
D	LDD	LDD	MCD	05/28/13	AS BUILT PER FIELD VERIFICATIONS
C				5/05/09	AS BUILT
B				9/30/08	AS BUILT
A	LM	ROB	MCG	5/27/97	CONVERTED TO AUTOCAD & AS-BUILT

62B ICS NODE FIRE ALARM
MX-316 TRANSMITTER 123
LOGIC DIAGRAM

UNIVERSITY OF CALIFORNIA LAWRENCE BERKELEY LABORATORY
FACILITIES DEPARTMENT

DRAWN BY	LM	DATE 4/
CHECKED BY	ROB	4/
APPROVED BY	MCG	5/
CAD FILE PATH		
SCALE	As Noted	
DRAWING NO.	4B62BE004D	
PROJECT NO.	153794	1