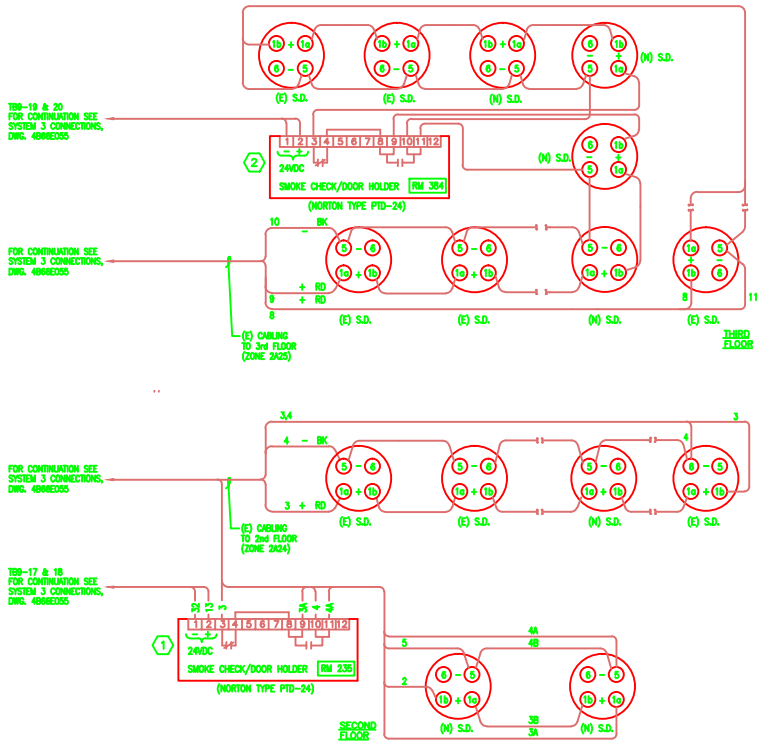

SHEET NOTES

1. CONNECT NEW SMOKE DETECTORS AND DOOR HOLDER INTO (E) ZONE 2A24.
2. CONNECT NEW SMOKE DETECTORS AND DOOR HOLDER INTO (E) ZONE 2A25.
3. CONNECTIONS TO OTHER NEW DEVICES IN THIS ZONE ARE IDENTICAL.
4. NOT USED
5. NOT USED

REFERENCE DWGS:

4B66E055	SYSTEM 3 CONNECTIONS
4B66E087	LOGIC DIAGRAM

ESS ARCHITECTS
450 Ninth Street
San Francisco, CA 94103
415 863-2000
415 863-1888 Fax

CONSULTANT

MAZZETTI & ASSOCIATES, INC.
Consulting Mechanical & Electrical Engineers
1000 BRANNAN STREET - SAN FRANCISCO, CA 94103-4321
TELEPHONE (415) 864-8899 FAX (415) 864-4343
421-225

REVISIONS

no.	date	description
1		60% TITLE II 9/28/94
2		100% TITLE II 11/7/94
3		FINAL TITLE II 2/13/95
4		REISSUE FINAL TITLE II 3/30/95
5		FIRE ALARM SCHEDULES REV. 1 7/7/95
6		FIRE & LIFE SAFETY REV 10/9/95
7		AS BUILT 7/25/97

JOB TITLE

FIRE AND SAFETY SYSTEMS UPGRADE
PHASE I
LAWRENCE BERKELEY LABORATORY, UNIVERSITY OF CALIFORNIA
BERKELEY, CALIFORNIA

KEY PLAN

REGISTERED PROFESSIONAL ENGINEER
WILLIAM R. MAZZETTI
No. 13480
EXP. 9/30/99
ELECTRICAL
STATE OF CALIFORNIA

ESS ARCHITECTS JOB #: 9292
LBL SC#: 728
LBL FILE DRAWING: *

LBNL DWG. 3N66E093G
PROJ # 120257

SHEET TITLE:
FIRE ALARM LOGIC & WIRING DIAGRAM

SCALE: NONE
DATE: 7/7/95

SHEET:
66-E2.2G