THE DRAWING AND DESIGN HEREIN SHALL NOT BE DUPLICATED, USED OR DISCLOSED TO OTHERS FOR PROCUREMENT OR OTHER PURPOSE (EXCEPT AS OTHERWISE AUTHORIZED BY CONTRACT) WITHOUT WRITTEN PERMISSION OF SIEMENS BUILDING TECHNOLOGIES, INC., FIRE SAFETY DIVISION. ALL OTHER REPRODUCTIONS SHALL BEAR THIS NOTICE.

DSC DUAL SYNC MODULE
(Mount Adjacent to FACP)

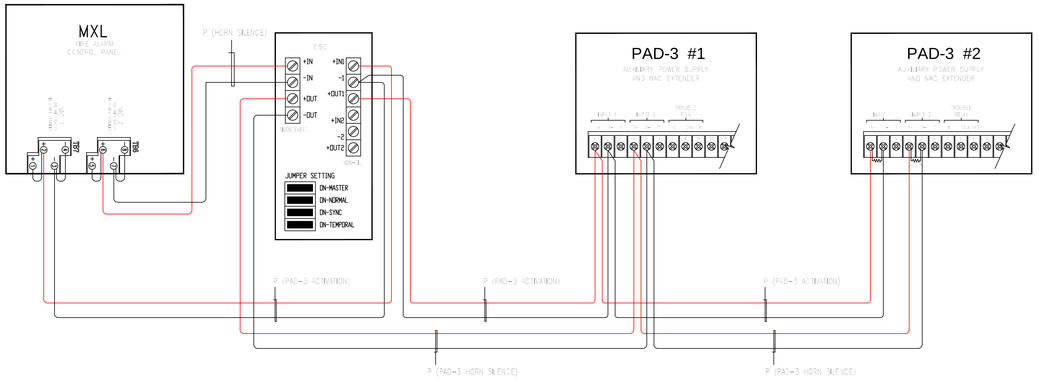

ACTIVATION & SYNC MULTIPLE PAD-3 PANEL
DETAIL SHOWN with AUDIBLE SILENCE FEATURE

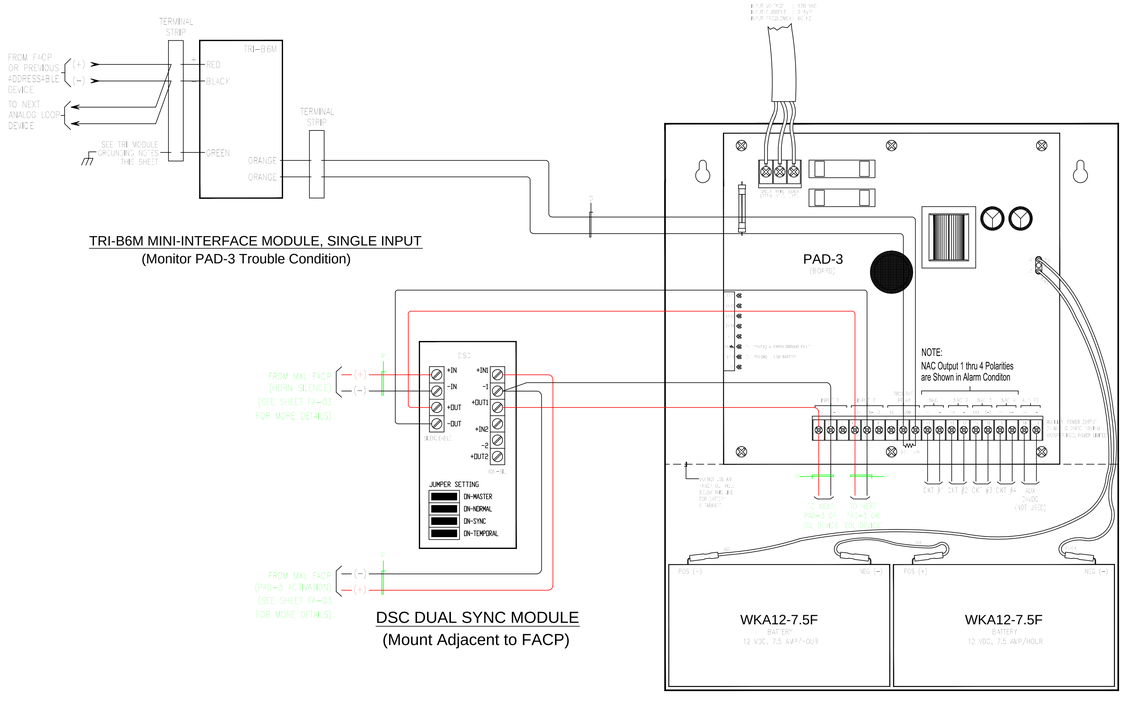

TRI-B6M MINI-INTERFACE MODULE, SINGLE INPUT
(Monitor PAD-3 Trouble Condition)

DSC DUAL SYNC MODULE
(Mount Adjacent to FACP)

NOTE:

1) PAD-3 PANEL USE 24K, 1/2W EOL RESISTOR TO LAST DEVICE ON EACH CIRCUIT OR TO NAC OUTPUT TERMINALS OF SPARE CIRCUIT(S).

PAD-3 #1 NAC SCHEDULE

CIRCUIT NO.	PANEL NO.	LOCATION
CKT A1	PAD #1	LEVEL ONE
CKT A2	PAD #1	LEVEL ONE
CKT A3	PAD #1	LEVEL TWO
CKT A4	PAD #1	LEVEL TWO

PAD-3 #2 NAC SCHEDULE

CIRCUIT NO.	PANEL NO.	LOCATION
CKT A5	PAD #2	LEVEL THREE
CKT A6	PAD #2	LEVEL THREE
CKT A7	PAD #2	SPARE
CKT A8	PAD #2	SPARE

PAD-3 SW 1 DIPSWITCH SETTINGS

1	2	3	4	5	6	7	8	9	10	SW1 DESCRIPTION
0	0									INPUT 1 CONTROLS OUTPUTS 1-4 (CLASS B) INPUT 2 NOT USED
1	0									INPUT 1 CONTROLS OUTPUTS 1-4 (CLASS B) INPUT 2 USED TO SILENCE SYNC HORNS
									1	INPUT 1 CONTROLS OUTPUTS 1-2 (CLASS B) INPUT 2 CONTROLS OUTPUTS 3-4 (CLASS B)
									0	INPUT 1 CONTROLS OUTPUTS 1-2 (CLASS B) INPUT 2 CONTROLS OUTPUTS 3-4 (CLASS B)
0	0									INPUT 1 CONTROLS OUTPUTS 1-2 AND 3/4 (CLASS A) INPUT 2 NOT USED
									1	INPUT 1 CONTROLS OUTPUTS 1-2 AND 3/4 (CLASS A) INPUT 2 USED TO SILENCE SYNC HORNS
0	1									INPUT 1 CONTROLS OUTPUTS 1/2 (CLASS A) INPUT 2 CONTROLS OUTPUTS 3/4 (CLASS A)
			0							AUXILIARY POWER OUTPUT ALWAYS ON
			1							AUXILIARY POWER OUTPUT SHUTDOWN 30 SECONDS AFTER AC POWER FAULT
				0	0					INPUT 3 OUTPUTS SLAVE MODE
				1	0					INPUT 3 OUTPUTS MASTER MODE (TEMPORAL OUTPUT)
				0	1					INPUT 3 OUTPUTS MASTER MODE (SYN HORN/STROBE OUTPUT)
						0	0			INPUT 2 OUTPUTS SLAVE MODE
						1	0			INPUT 2 OUTPUTS MASTER MODE (TEMPORAL OUTPUT)
						0	1			INPUT 2 OUTPUTS MASTER MODE (SYN HORN/STROBE OUTPUT)
								0	0	NO AC LOSS REPORTING DELAY
								1	0	8-HOUR AC LOSS REPORTING DELAY
								0	1	16 HOUR AC LOSS REPORTING DELAY
								1	1	24 HOUR AC LOSS REPORTING DELAY

PAD-3	No. 1	BATTERY CALCULATIONS

SUPERVISORY CURRENT

DESCRIPTION	QTY	DEVICE CURRENT	STANDBY CURRENT	ALARM CURRENT
PAD-3	1		0.20	0.24
			0	
			0	
			0	
TOTAL CURRENT			0.20	

ALARM CURRENT

CKT	DEVICE DESCRIPTION	QTY	DEVICE CURRENT RATING	TOTAL OUTPUT CURRENT LOAD
A1	STROBE 15 CANDELA WALL	1	0.064	0.064
0.609	STROBE 30 CANDELA WALL	9	0.098	0
	ACPRINTER30 30 CANDELA WALL	1	0.113	0.132
	ACPRINTER30 15 CANDELA WALL	3	0.113	0.113
	ACPRINTER30 75 CANDELA WALL	1	0.113	0.113
	MINI HORNS	8	0.036	0.238
A2	STROBE 15 CANDELA WALL	1	0.064	0.064
0.634	STROBE 30 CANDELA WALL	5	0.098	0.098
	ACPRINTER30 15 CANDELA WALL	1	0.064	0.064
	ACPRINTER30 75 CANDELA WALL	1	0.113	0.113
	MINI HORNS	6	0.036	0.198
	STROBE 15 CANDELA CEILING MOUNT	1	0.064	0.064
A3	STROBE 15 CANDELA WALL	1	0.064	0.064
0.665	STROBE 30 CANDELA WALL	8	0.098	0
	ACPRINTER30 30 CANDELA WALL	1	0.064	0.064
	ACPRINTER30 30 CANDELA WALL	1	0.113	0.132
	MINI HORNS	16	0.036	0.36
A4	STROBE 15 CANDELA WALL	8	0.064	0
0.488	ACPRINTER30 15 CANDELA WALL	2	0.064	0
	ACPRINTER30 75 CANDELA WALL	2	0.113	0.226
	MINI HORNS	16	0.036	0.36
			TOTAL ALARM CURRENT (AMPS)	2.533

SUMMARY

A = TOTAL SUPERVISORY CURRENT =
SUPERVISORY TIME REQUIRED
= 0.200 (AMPS) x 24 HR
= 4.800 (AMPHR)

B = TOTAL ALARM CURRENT =
ALARM TIME REQUIRED
= 2.533 (AMPS) x 24 AMPS x .083 HR
= 5.266 (AMPHR)

C = A + B
= 5.166 (AMPHR)

SUPERVISORY TIME REQUIRED---- 24 HR
ALARM TIME REQUIRED---- 5 MINS. or .083 HR

BATTERY PROVIDED: WKA12-7.5F (2)
BATTERY SIZE: 7.5 (AMPHR)

TOTAL SYSTEM REQUIRED (A+B)
= 2.383 AMPHOUR

BATTERY RESERVE AFTER
24 HOURS SUPERVISORY
& 5 MINUTES ALARM
= 5.234 AMPHOUR

PAD-3	No. 2	BATTERY CALCULATIONS

SUPERVISORY CURRENT

DESCRIPTION	QTY	DEVICE CURRENT	STANDBY CURRENT	ALARM CURRENT
PAD-3	1		0.08	0.24
			0	
			0	
			0	
TOTAL CURRENT			0.08	

ALARM CURRENT

CKT	DEVICE DESCRIPTION	QTY	DEVICE CURRENT RATING	TOTAL OUTPUT CURRENT LOAD
A5	STROBE 15 CANDELA WALL	1	0.064	0.064
0.93	STROBE 30 CANDELA WALL	0	0.098	0
	ACPRINTER30 30 CANDELA WALL	2	0.064	0.128
	MINI HORNS	10	0.036	0.36
A6	STROBE 15 CANDELA WALL	1	0.064	0.064
0.940	STROBE 30 CANDELA WALL	1	0.098	0
	ACPRINTER30 30 CANDELA WALL	2	0.064	0.128
	MINI HORNS	10	0.036	0.36
			TOTAL ALARM CURRENT (AMPS)	1.930

SUMMARY

A = TOTAL SUPERVISORY CURRENT =
SUPERVISORY TIME REQUIRED
= 0.080 (AMPS) x 24 HR
= 1.920 (AMPHR)

B = TOTAL ALARM CURRENT =
ALARM TIME REQUIRED
= 1.930 (AMPS) x 24 AMPS x .083HR
= 3.848 (AMPHR)

C = A + B
= 5.768 (AMPHR)

SUPERVISORY TIME REQUIRED---- 24 HR
ALARM TIME REQUIRED---- 5 MINS. or .083HR

BATTERY PROVIDED: WKA12-7.5F (2)
BATTERY SIZE: 7.5 (AMPHR)

TOTAL SYSTEM REQUIRED (A+B)
= 5.768 AMPHOUR

BATTERY RESERVE AFTER
24 HOURS SUPERVISORY
& 5 MINUTES ALARM
= 9.424 AMPHOUR

ACTUAL VOLTAGE DROP CALCS

CKT	DISTANCE (ft.)	CURRENT LOAD (amps)	VOLTAGE DROP (%)
A1	355	0.859	4.399
A2	465	0.835	4.070
A3	385	0.551	2.924
A4	450	0.448	2.984
A5	450	0.59	3.659
A6	495	0.448	3.056

VOLTAGE DROP CALCULATIONS
(WORST CASE SHOWN)

FORMULA: VOLTAGE DROP CALCULATIONS (FOR A GIVEN LENGTH OF CONDUCTOR) = I.X.D.X21.6 / C.M.

WHERE:
I = AMPERES PER TERMINAL LOAD
D = ONE WAY DISTANCE OF CONDUCTOR (IN FEET) MEASURED FROM SOURCE OF SUPPLY TO LOAD
21.6 = CONSTANT (RESISTANCE OF CONDUCTORS AT 10.8 OHMS PER L.M. FOR TWICE THE LENGTH)
C.M. = CROSS SECTIONAL AREA IN CIRCULAR MILS (SEE TABLE AT RIGHT)

WIRE SIZE	CIRCULAR MILS (C.M.)
12 AWG	6530
14 AWG	4110
16 AWG	2580
18 AWG	1620
20 AWG	1020

GIVEN:
CIRCUIT DESIGNATION = A1 *
APPROX. LENGTH OF CONDUCTOR = 355 FEET
CURRENT LOAD = 0.859
WIRE SIZE USED = 12 * AWG

VOLTAGE DROP = 0.859 x 355 x 21.6 / 6530 = 6893.532 / 6530 = 1.056 VOLTS

% OF VOLTAGE DROP = 1.056 VOLTS / 24 VOLTS = 0.043986 or 4.399 %

NOTES:
1. THE OPERATING VOLTAGE OF DEVICE USED IS 18 TO 31 VDC. THE RESULTING VOLTAGE DROP IS WITHIN THIS OPERATING RANGE.
2. PERMISSIBLE VOLTAGE DROP IS 10% OR LESS

PAD-3 AUXILIARY POWER SUPPLY & NAC EXTENDER (TYPICAL OF 2)
LOCATED AT LEVEL ONE STORAGE 118A

R E V I S I O N S

No.	Revision	By	Date	Appr.
1	REVISED PER FIRE MARSHAL'S COMMENTS DATED 02/12/09	JPM	2/27/09	KW
	AS-BUILT	JPM	8/10/09	KW

AS BUILT

C-10 APPROVAL STAMP:

REGISTERED CALIFORNIA LICENSED CONTRACTOR
LICENSED ELECTRICAL TECHNOLOGY
LIC. NO. 758796
STATE OF CALIFORNIA

ENGINEERING CONSULTANTS:

CUSTOMER'S NAME & ADDRESS

PRODUCT MANUFACTURER:

Siemens Building Technologies, Inc.
Fire Safety Division

25821 Industrial Boulevard, Suite 300
Hayward, California 94545-2991
Tel (510) 783-6000 Fax (510) 293-2100

California State C10 License No. 758796
U.L. Certificate ID No. 324787-001

JOB NAME & LOCATION (STREET ADDRESS)

LAWRENCE BERKELEY NATIONAL LABORATORY

BERKELEY LAB GUEST HOUSE

Berkeley, California

SHEET CONTENTS:

PAD-3 NAC EXTENDER PANEL DETAILS & NAC SCHEDULES

INSTALLATION TYPE

- ☒ NEW INSTALLATION
- ☐ DESIGN/BUILD
- ☒ PER CONTRACT DOCUMENT
- ☐ EXISTING BASE JOB # N/A
- ☐ OTHERS

SYSTEM SALES REP.: Kevin Waxman

PROJECT MANAGER: Mark Millard

DRAWN BY: John Paul Minas

CAD FILENAME: FA-04

SCALE: Not Applicable

DATE DRAWN: January 12, 2009

PLOT DATE: November 04, 2013

DRAWING NO. 6B23E006

SHEET FA-04

JOB NUMBER 44OP-048653

IF DRAWING IS SMALLER THAN 30" X 42" IT IS A REDUCED COPY