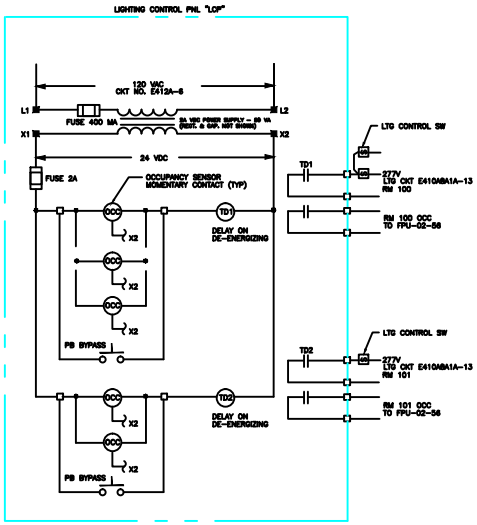

SCHEMATIC DIAGRAM - LIGHTING CONTROL

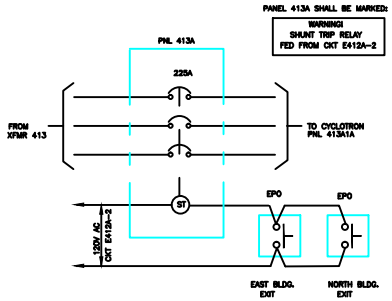

SCHEMATIC DIAGRAM - CYCLOTRON EMERGENCY SHUTDOWN

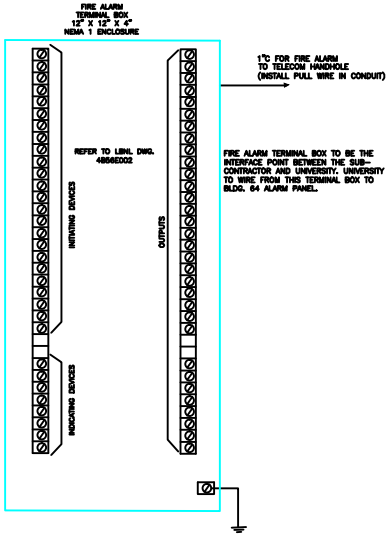

FIRE ALARM SYSTEM - WIRING DIAGRAM

CAD FILE: 00002614

No	REVISION/SUBMISSION	Date
A	AS-BUILT	5/18/97
0	ISSUED FOR CONSTRUCTION	5/4/94

120213	4N56E010A	Quasar
BLDG. 56 BIO-MED. ISOTOPE FACILITY ELECTRICAL SCHEMATIC DIAGRAMS	DR. J. BAZZELL 5/18/93 DR. W. HELFRICH 5/5/94 DR. S. DEASON 5/5/94 SCALE NONE	
UNIVERSITY OF CALIFORNIA, LAWRENCE BERKELEY LABORATORY FACILITIES DEPT. – ARCHITECTURE & ENGINEERING	259-E7	