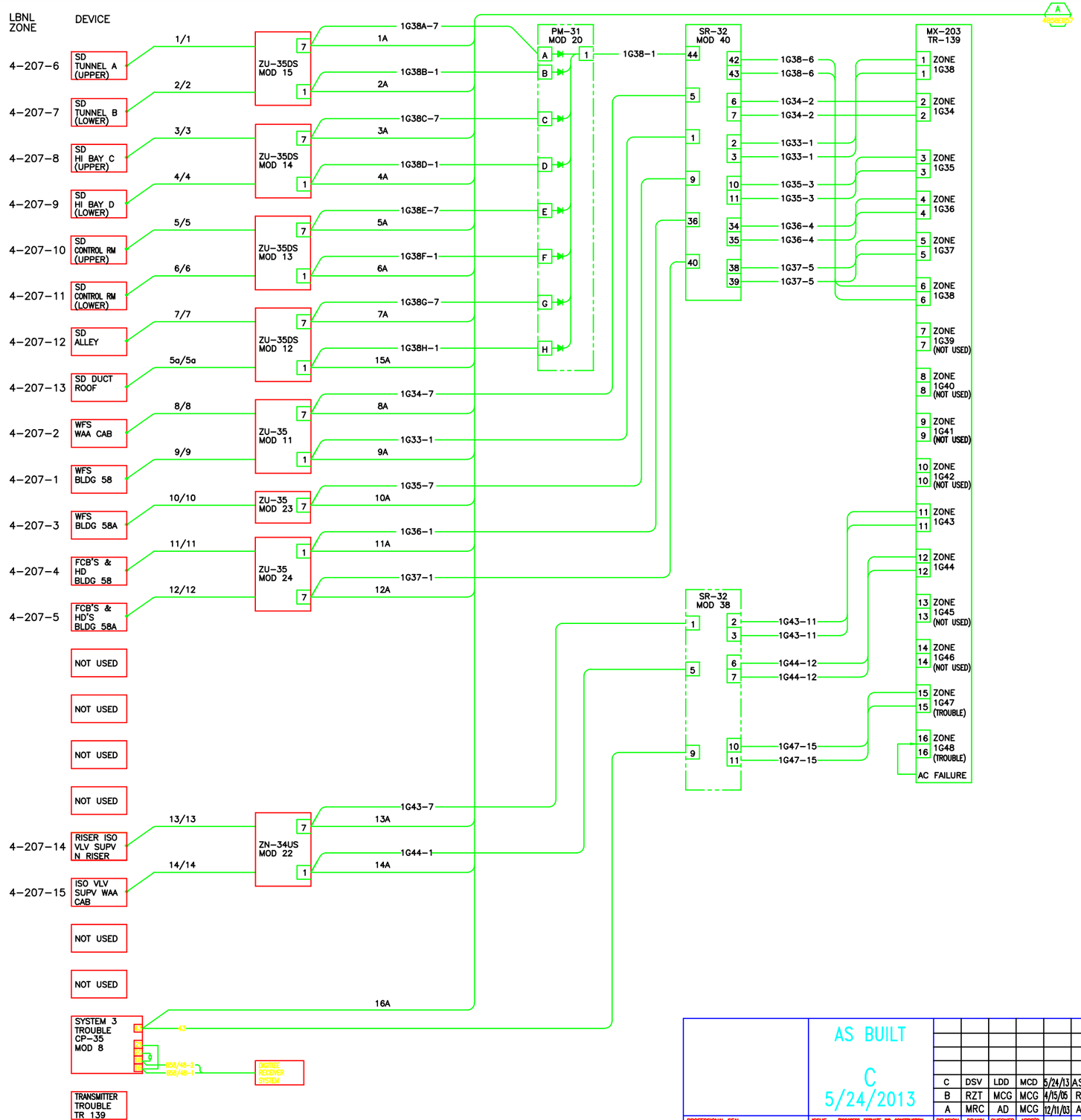

AS BUILT

C
5/24/2013

REVISION NUMBER	DRAWN BY	CHECKED BY	APPR'D BY	DATE	REMARKS
C	DSV	LDD	MCD	5/24/13	AS BUILT PER FIELD VERIFICATION
B	RZT	MCG	MCG	4/15/05	REVISED FOR DIGITIZE SYSTEM.
A	MRC	AD	MCG	12/11/03	AS-BUILT PHASE II FA UPGRADE

PROFESSIONAL SEAL (IF REVISION, APPLIES ONLY TO REVISED WORK)

ISSUE (PROGRESS, ESTIMATE, BID, CONSTRUCTION, CONFORMED, REVISION, RECORD)

58 BLDG 58, 58A
REPLACEMENT FIRE ALARM SYSTEM
LOGIC DIAGRAM, TR-139

UNIVERSITY OF CALIFORNIA
LAWRENCE BERKELEY NATIONAL LABORATORY
FACILITIES DIVISION

DRAWN BY HYT	DATE 3/30/2001	
CHECKED BY HYT	3/30/2001	
APPROVED BY XXX	1/2/2002	
CAD FILE PATH		
SCALE Full		
DRAWING NO. 4B58E056C	SHEET 1	
PROJECT NO. FA8040	1 OF 1	