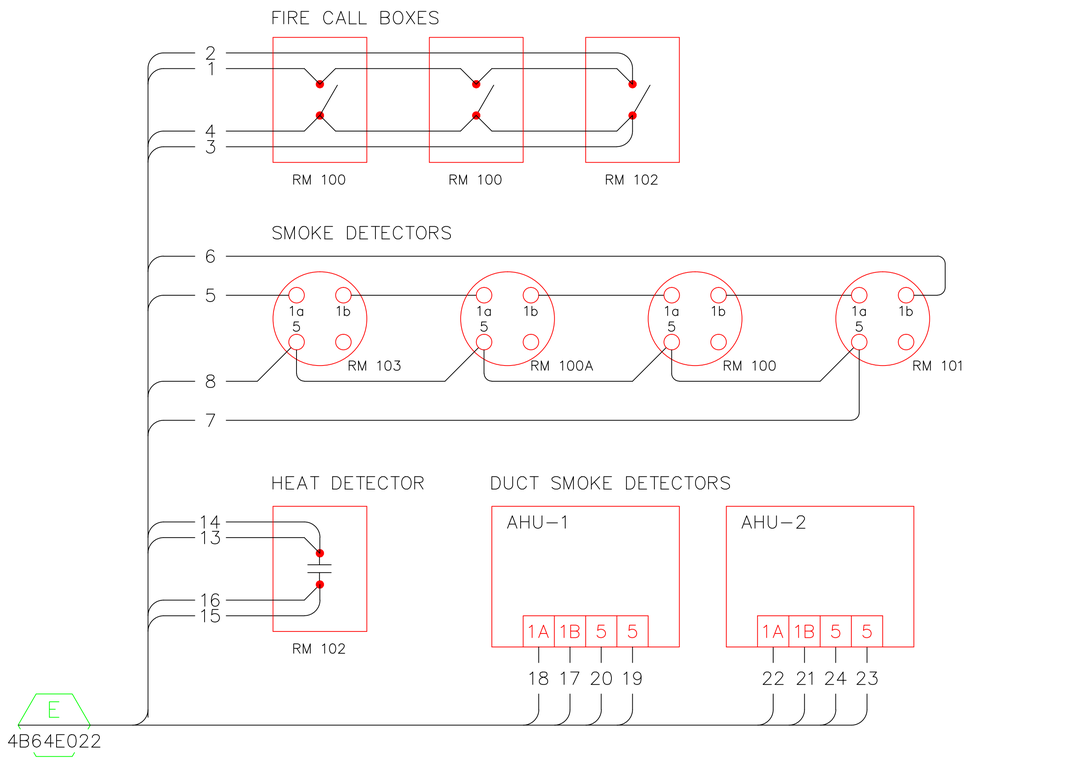

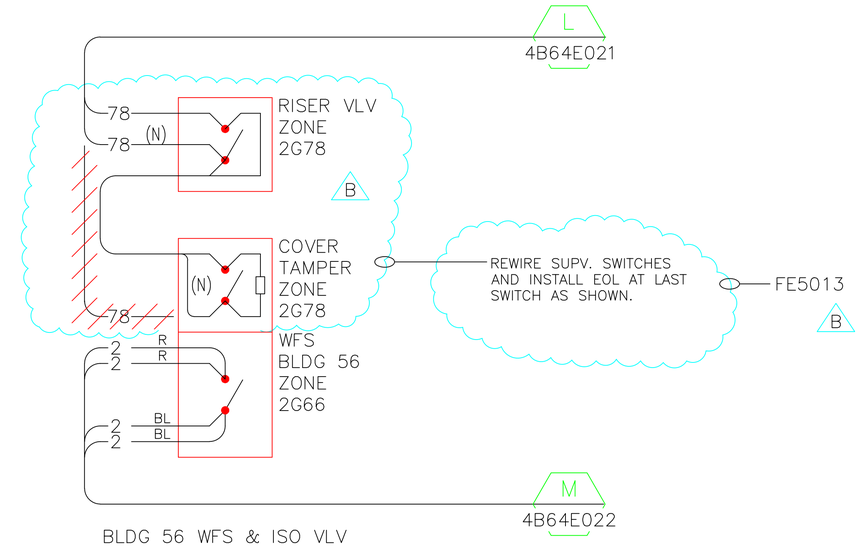

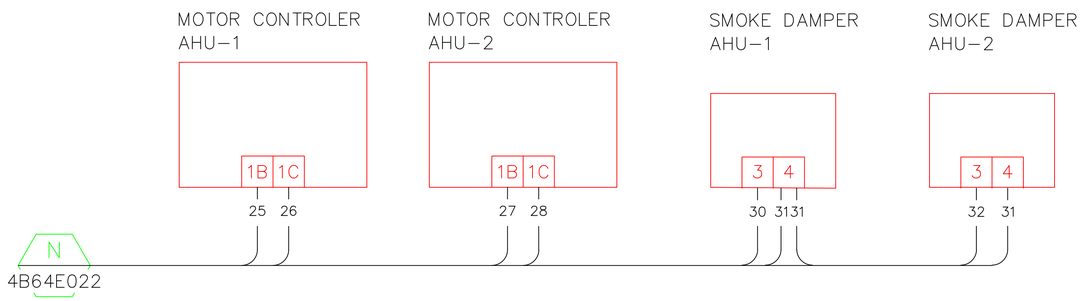

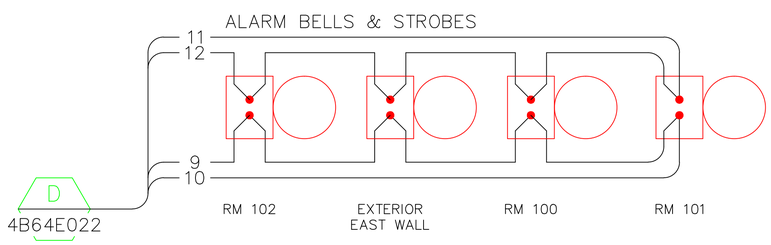

DISTRIBUTION:

2 – ELECTRIC SHOP – B76 (FILE I)
1 – STICK FILE B90J
ORIGINAL – B90F FLAT FILE

REFERENCE DRAWINGS

4B64E021	BLDG 64/56 TRANSMITTER WIRING & LOGIC
4B64E022	BLDG 64/56 SYS 3 WIRING PANEL FAP-001-064
4B64E023	BLDG 64/56 SYS 3 PANEL FAP-001-064 SR-33 & PM-32 WIRING
4B64E024	BLDG 64 FIRE ALARM SYS INITIATING DEVICE WIRING
4B64E084	BLDG 64 FIRE ALARM SYS ALARM/ACTIVATION DEVICE WIRING

PROFESSIONAL SEAL (IF REVISION, APPLIES ONLY TO REVISED WORK)

ISSUE (PROGRESS, ESTIMATE, BID, CONSTRUCTION, CONFORMED, REVISION, RECORD)

TITLE 2
CONSTRUCTION
B
5/9/2005

REVISION NUMBER	DRAWN BY	CHECKED BY	APPR'D BY	DATE	REMARKS
B	AD	MCG	MCG	5/09/05	REVISED FOR MXL/DIGITIZE SYSTEMS
A	LDD	LDD	MCG	3/12/97	AS BUILT

56 BIO-MED ISOTOPE FACILITY
FIRE ALARM SYSTEM
DEVICE WIRING

UNIVERSITY OF CALIFORNIA
LAWRENCE BERKELEY NATIONAL LABORATORY
FACILITIES DIVISION

DRAWN BY	LDD	DATE 3/11/1997
CHECKED BY	LDD	3/11/1997
APPROVED BY	MCG	3/12/1997
CAD FILE PATH	00019396	
SCALE	As Noted	
DRAWING NO.	4B56E002B	SHEET 1 OF1
PROJECT NO.	120213	