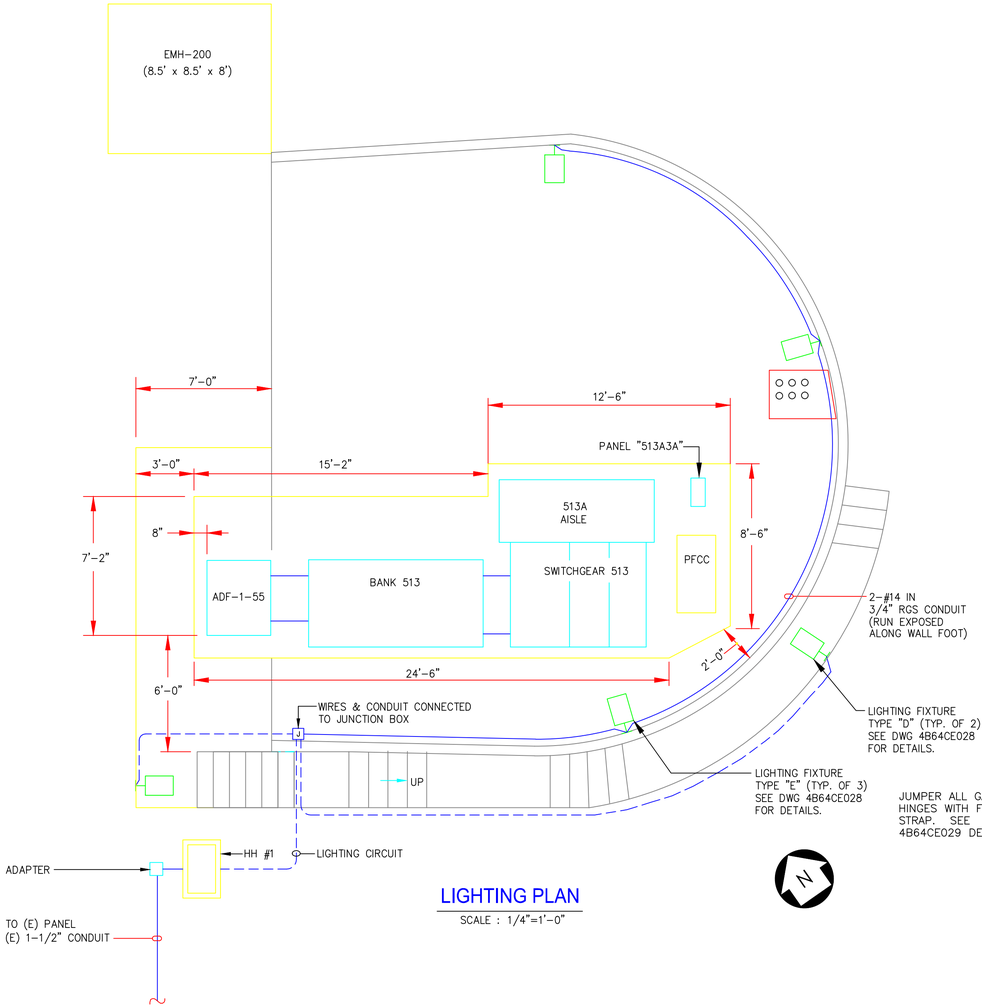

LIGHTING PLAN

SCALE : 1/4"=1'-0"

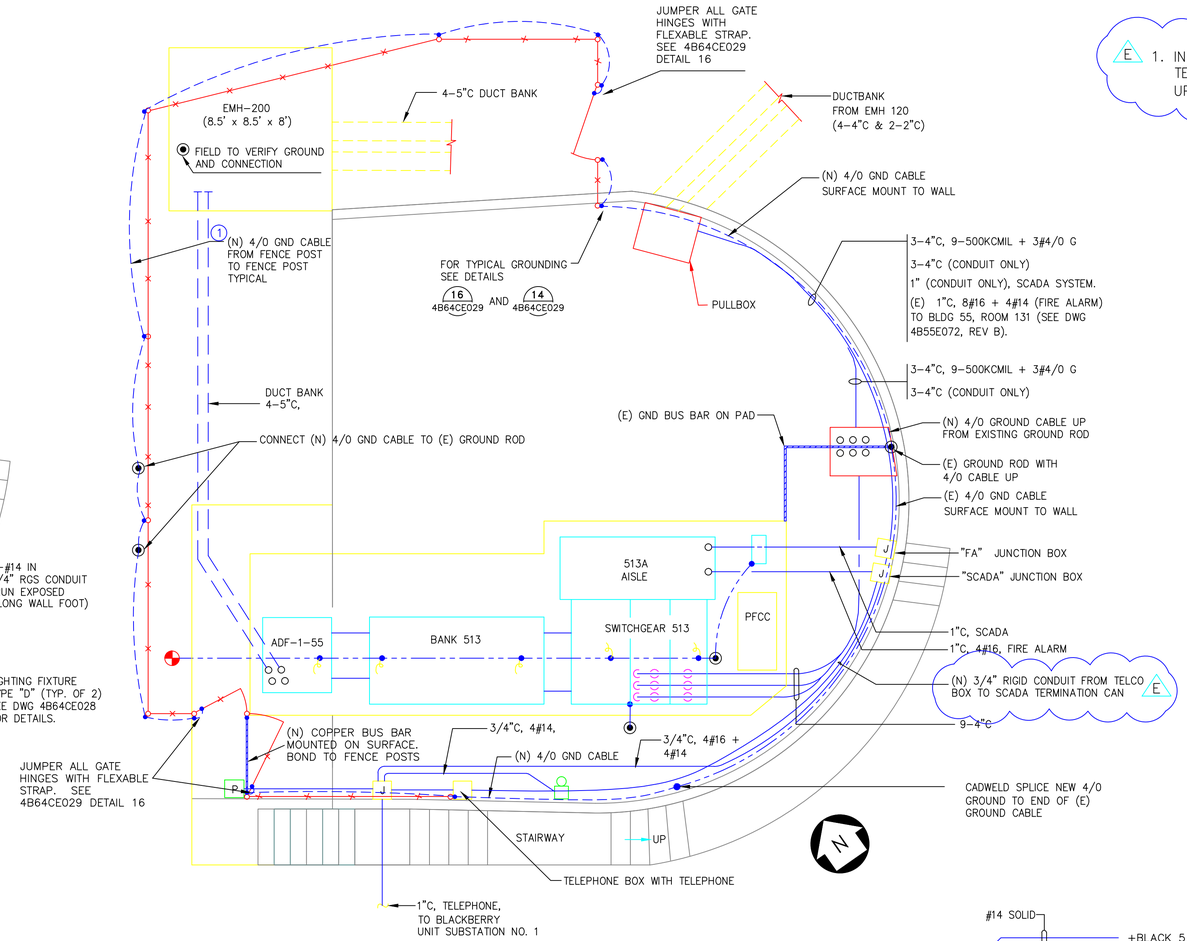

GROUNDING, FIRE ALARM & COMMUNICATION PLAN

SCALE : 1/4"=1'-0"

NOTES

E 1. INSTALL (N) 3/4" RIGID CONDUIT FROM (E) TELEPHONE BOX ALONG CONCRETE WALL AND SWEEP UP INTO THE (E) SCADA BOX AS SHOWN.

LEGEND:

- SMOKE DETECTOR-IONIZATION
- SMOKE DETECTOR-PHOTOELECTRIC
- PULL STATION
- 20A, GROUND FAULT CIRCUIT INTERRUPTER
- DUPLEX RECEPTACLE
- JUNCTION BOX
- FIRE ALARM BELL, @ +96" AFF.
- GROUND ROD
- GROUND WELL

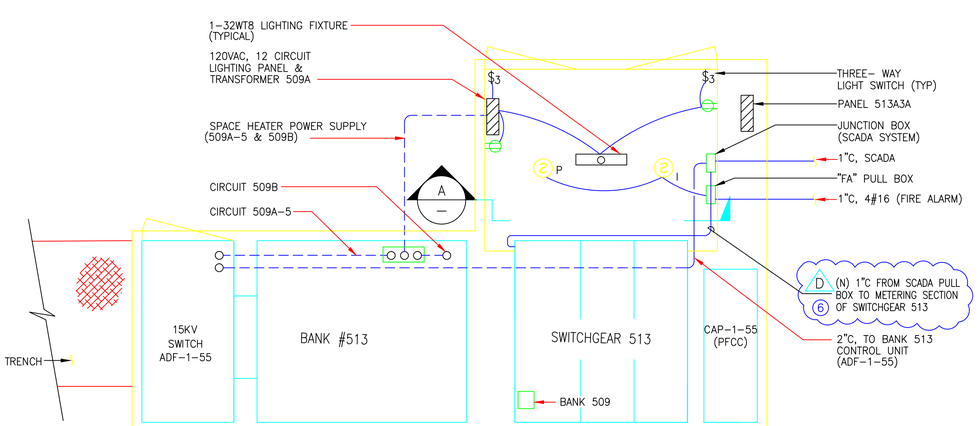

LIGHTING & FIRE ALARM DETAIL

N.T.S.

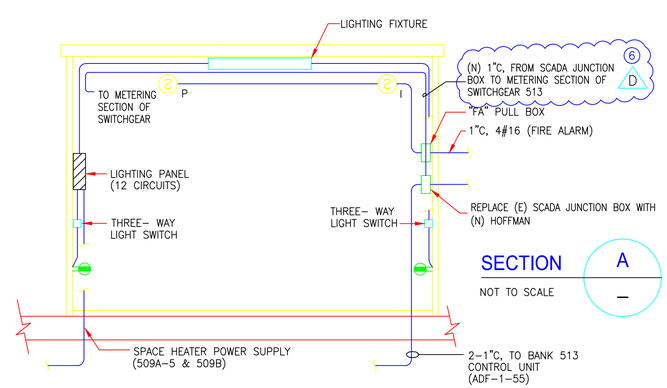

SECTION A

NOT TO SCALE

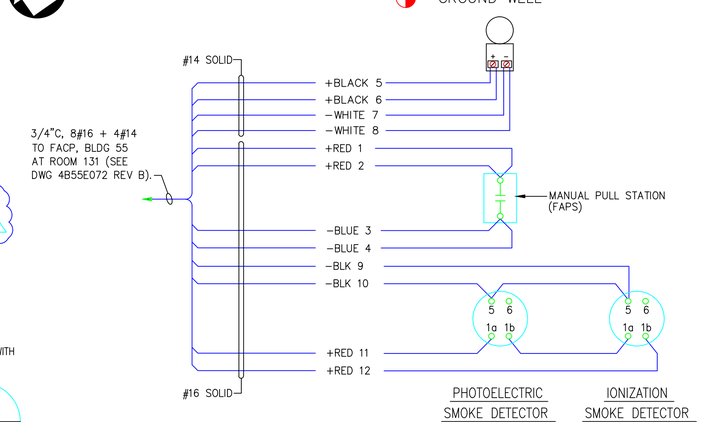

FIRE ALARM DEVICE WIRING

NOT TO SCALE

E	GMS	MCG	MCG	9/1/04	(N) TELCO CONDUIT
D	GMS	TK	TK	7/15/04	CHANGED BLDG # & FIXED FENCE GND
C	AD	MCG	MCG	11/01/02	ADDED SD'S, BELL & FCB
B	U.T.	B.F.	L.L.	2/99	REVISED REBID OF CONST. PACKG
A	S.AO	G.W.	L.L.	10/15	REVISED AS SHOWN
REVISION NUMBER	DRAWN BY	CHECKED BY	APPR'D BY	DATE	REMARKS

PROFESSIONAL SEAL (IF REVISION, APPLIES ONLY TO REVISED WORK)

ISSUE (PROGRESS, ESTIMATE, BID, CONSTRUCTION, CONFORMED, REVISION, RECORD)

TITLE 2
CONSTRUCTION
E
9/2/2004

FORMERLY 4B64CE051C

55 UNIT SUB 513

LIGHTING, FA, COMM, FENCE & GND'G PLAN

UNIT SUBSTATIONS REPLACEMENT PROJECT

UNIVERSITY OF CALIFORNIA
LAWRENCE BERKELEY NATIONAL LABORATORY
FACILITIES DIVISION

513

DRAWN BY	UT	DATE 1/1/1998
CHECKED BY	GW	1/1/1998
APPROVED BY	LL	1/1/1998
CAD FILE PATH	00018284	
SCALE	As Noted	
DRAWING NO.	4B55E108E	SHEET E1
PROJECT NO.	FE3014	1 OF 1