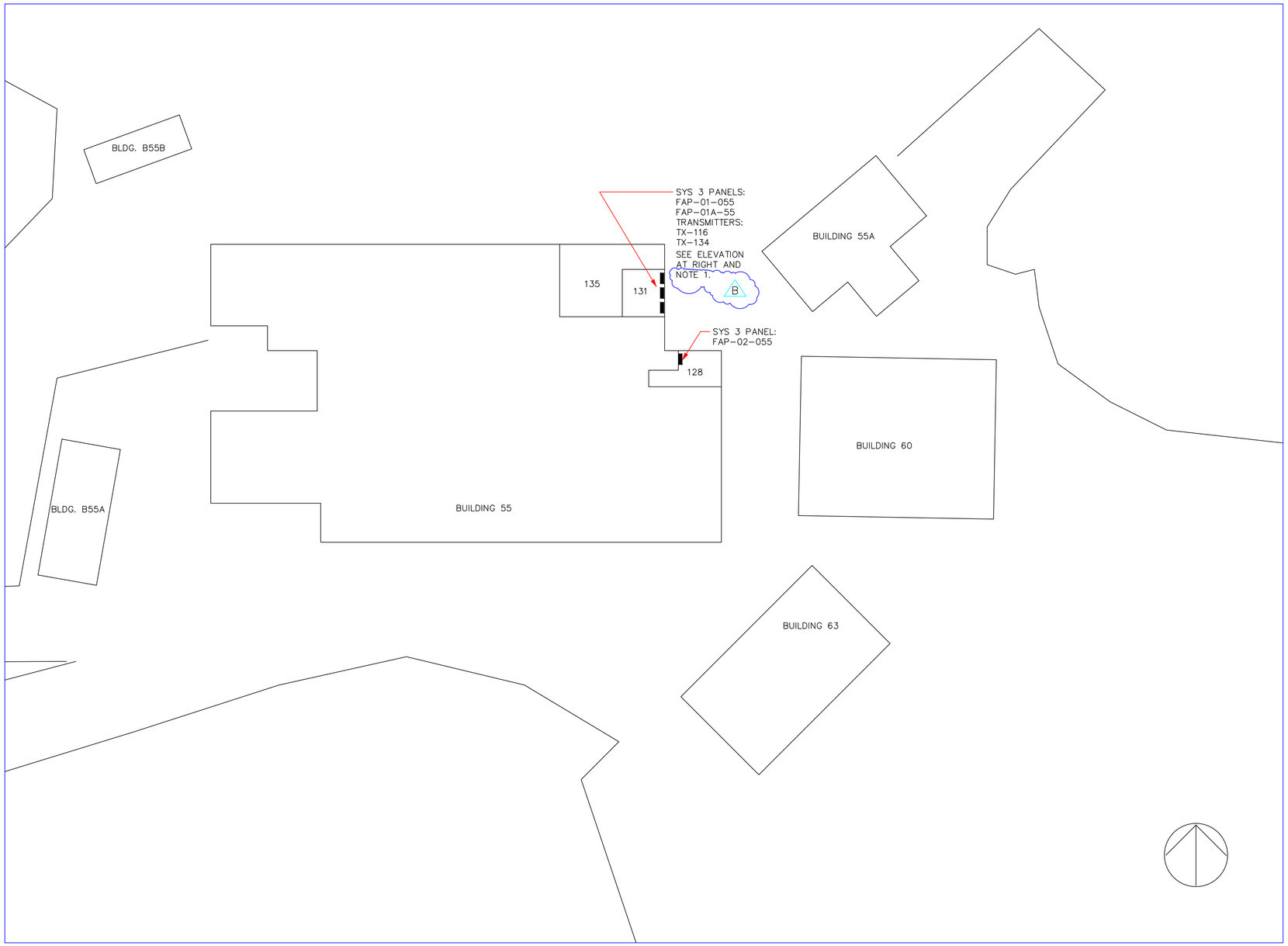

P L A N
BUILDING 55 COMPLEX
SCALE: 1"=20'-0"

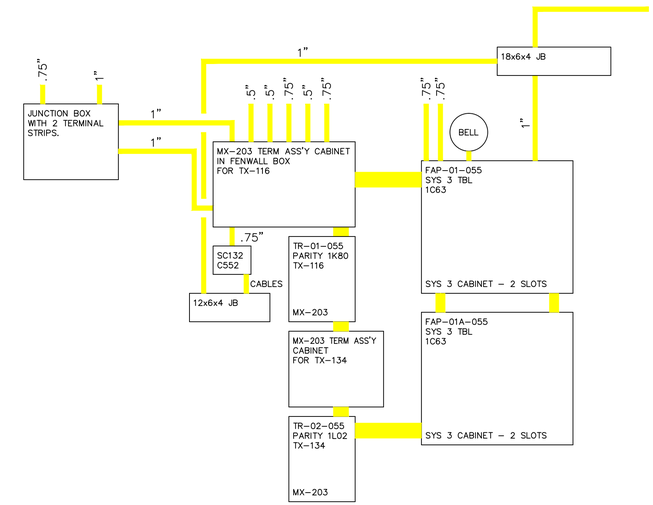

E L E V A T I O N
BUILDING 55 - ROOM 131
NO SCALE

NOTE:

B

1. USE EXISTING CONDUIT FROM EMH122 TO FIRE ALARM PANEL "FAP-01A-055. SEE MANHOLE EMH122, DRAWING NO. 6R8001, SHEET 122, REV B.

REFERENCE DRAWINGS

1. 55E069 BLDG. 55 FIRE ALARM SYSTEM LOGIC TR-116 & TR-134
2. 55E070 BLDG. 55 FIRE ALARM SYSTEM SYS 3 INTERCONNECTION DIAGRAM
3. 55E071 BLDG. 55 FIRE ALARM SYSTEM MX-203 INTERCONNECTION DIAGRAM

REVISION NUMBER	DRAWN BY	CHECKED BY	APPR'D BY	DATE	REMARKS
B	AD	MCG	MCG	11/4/02	ADDED CONDUIT FOR SD'S, BELL, & FCB
A	LM	MCG	MCG	6/25/98	CONSTRUCTION COMPLETE, FIELD TO VERIFY

55 , 55A, 60 & 63
FIRE ALARM SYSTEM
PLAN

UNIVERSITY OF CALIFORNIA LAWRENCE BERKELEY LABORATORY
FACILITIES DEPARTMENT

DRAWN BY	LSR	DATE	10/25/94
CHECKED BY			
APPROVED BY	MCG		10/26/94
CAD FILE PATH	00015243		
SCALE	As Noted		
DRAWING NO.	4B55E072B	SHEET	1 OF 1
PROJECT NO.	FA8040		