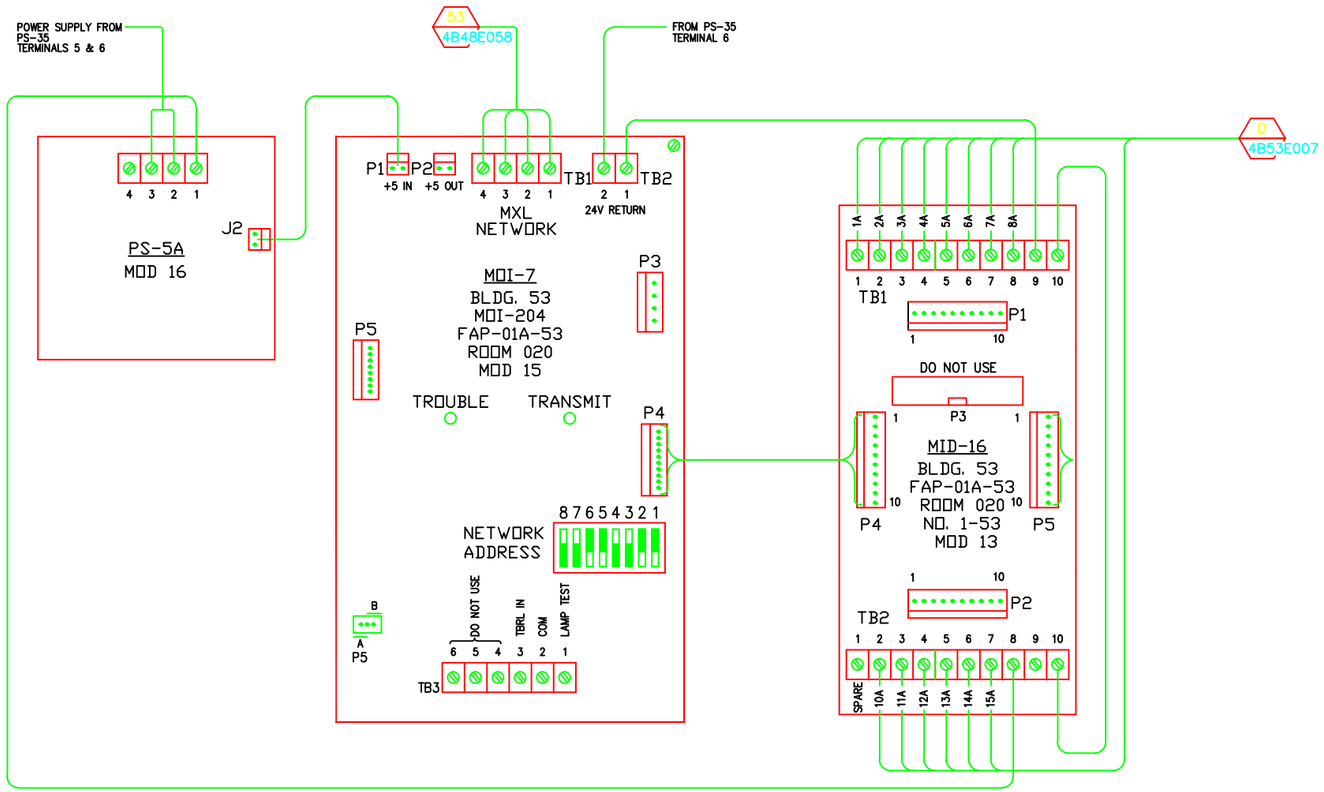

OLD ADDRESS	DESCRIPTION	MID-16 TERMINATION	MODULE TYPE & NO.	MXL NO. 1-48 ADDRESS	
1D17	FCB & HD'S BASEMENT AND TRAILER HOUSE	TB1, No. 1	MID 16, No. 1-53	1-204-1	
1D18	FCB & HD'S-FIRST FLOOR	TB1, No. 2	MID 16, No. 1-53	1-204-2	
1D19	SPRINKLERS, BASEMENT AND TRAILER	TB1, No. 3	MID 16, No. 1-53	1-204-3	
1D20	SPRINKLERS, FIRST FLOOR	TB1, No. 4	MID 16, No. 1-53	1-204-4	
1D21	WATERFLOW & FIRE CALL BOX BUILDING 27	TB1, No. 5	MID 16, No. 1-53	1-204-5	
1D22	WATERFLOW & FIRE CALL BOX BUILDING 17	TB1, No. 6	MID 16, No. 1-53	1-204-6	
1D23	HYDROGEN GAS DETECTOR ROOM 022	TB1, No. 7	MID 16, No. 1-53	1-204-7	
1D24	B. 53 SD, FACP, ROOM 020	TB1, No. 8	MID 16, No. 1-53	1-204-8	
1D25	NOT USED	TB2, No. 1	MID 16, No. 1-53	1-204-9	
1D26	B. 27 FCB (1)	TB2, No. 2	MID 16, No. 1-53	1-204-10	
1D27	SUPERVISION, RISER VALVES, EAST SIDE (2)	TB2, No. 3	MID 16, No. 1-53	1-204-11	
1D28	SUPERVISION, RISER VALVES, EAST CORNER (2)	TB2, No. 4	MID 16, No. 1-53	1-204-12	
1D29	B. 53 TS ISO VLV BSMT	TB2, No. 5	MID 16, No. 1-53	1-204-13	
1D30	B. 53 TS ISO VLV BSMT & TRAILERS	TB2, No. 6	MID 16, No. 1-53	1-204-14	
1D31	B.53 TS ISOL VLV FIRST FLOOR	TB2, No. 7	MID 16, No. 1-53	1-204-15	
1D32	SYSTEM 3 TROUBLE	TB2, No. 8	MID 16, No. 1-53	1-204-16	B53 M01 RIBBON UNPLUGGED

REFERENCE DRAWINGS:

FIRE ALARM CONNECTION DIAGRAM	4B53E001
LOGIC DIAGRAM MX-203, TR120	4B53E007
SYS 3+SR-35 CONNECTION DIGRAM	4B53E008
MOI + MID ARRANGEMENT	4B53E009
DIGITIZE NETWORK	4B48E032
MXL NETWORK	4B48E058

AS BUILT REVISION C 5/15/2009

REVISION NUMBER	DRAWN BY	CHECKED BY	APPR'D BY	DATE	REMARKS
C				5/15/09	AS BUILT
B				9/30/08	AS BUILT
A	AD	LDD	MCD	02/24/06	REVISED FOR MXL COPPER LOOP

PROFESSIONAL SEAL (IF REVISION, APPLIES ONLY TO REVISED WORK)

ISSUE (PROGRESS, ESTIMATE, BID, CONSTRUCTION, CONFORMED, REVISION, RECORD)

53 FIRE ALARM SYSTEM
MOI/MID MODULE ARRANGEMENT
CONNECTION DIAGRAM, LOOP NO. 1

UNIVERSITY OF CALIFORNIA
LAWRENCE BERKELEY NATIONAL LABORATORY
FACILITIES DIVISION

		DATE
DRAWN BY	AD	9/3/2004
CHECKED BY	LDD	9/3/2004
APPROVED BY	MCD	9/3/2004
CAD FILE PATH		
SCALE	Full	
DRAWING NO.	4B53E009C	SHEET FA
PROJECT NO.	FB4010	1 OF 1