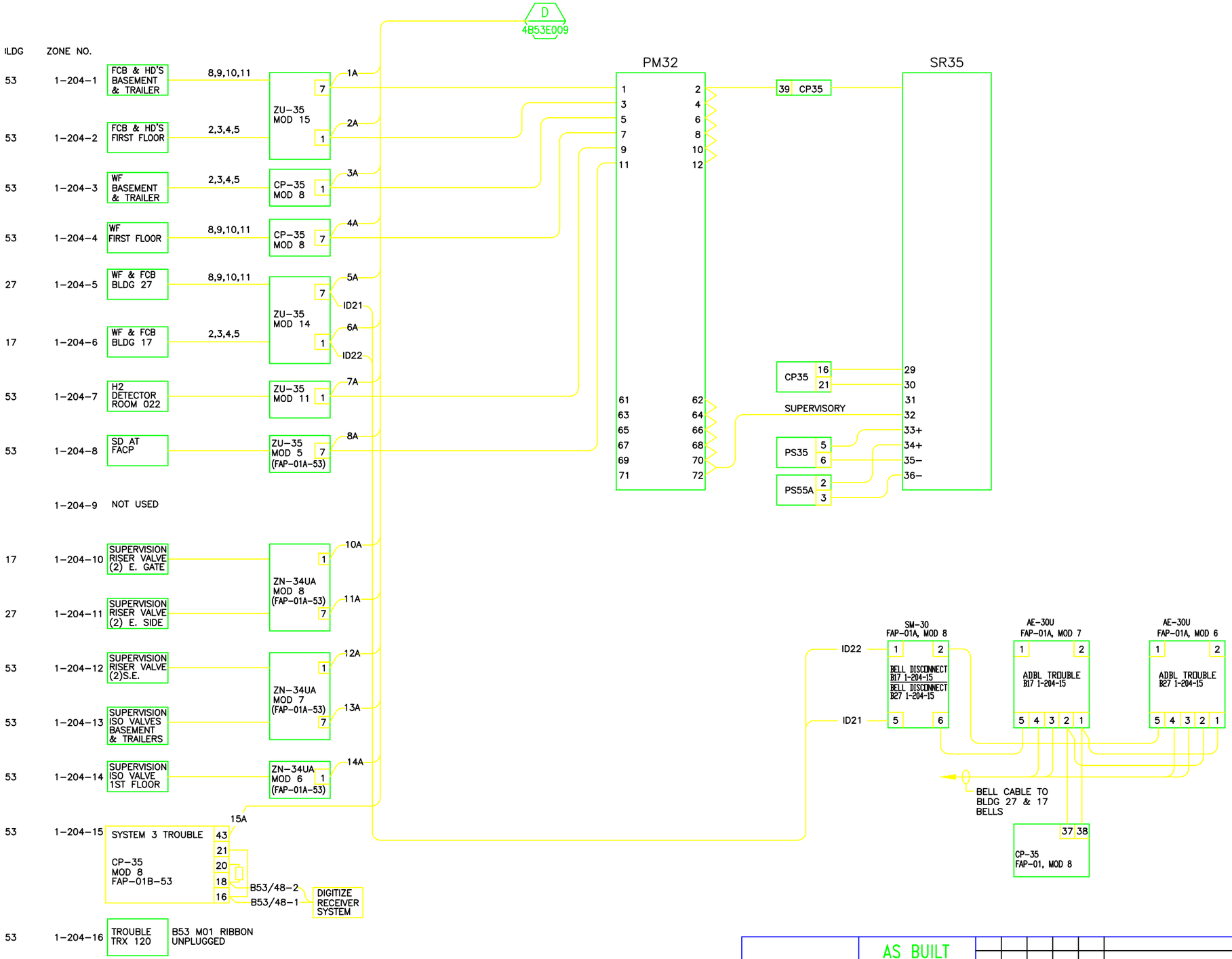

REFERENCE DRAWINGS:

FIRE ALARM CONNECTION DIAGRAM	4B53E001
LOGIC DIAGRAM MX-203, TR120	4B53E007
SYS 3+SR-35 CONNECTION DIGRAM	4B53E008
MOI + MID ARRANGEMENT	4B53E009
DIGITIZE NETWORK	4B48E032
MXL NETWORK	4B48E058

AS BUILT REVISION C 5/15/2009

REVISION NUMBER	DRAWN BY	CHECKED BY	APPR'D BY	DATE	REMARKS
C				5/15/09	AS BUILT
B				9/30/08	AS BUILT
A	MRC	AD	MCG	09/13/04	REVISED FOR MXL/DIGITIZE SYSTEMS

PROFESSIONAL SEAL (IF REVISION, APPLIES ONLY TO REVISED WORK)

ISSUE (PROGRESS, ESTIMATE, IND, CONSTRUCTION, CONFORMED, REVISION, RECORD)

53
FIRE ALARM SYSTEM
LOGIC DIAGRAM

UNIVERSITY OF CALIFORNIA
LAWRENCE BERKELEY NATIONAL LABORATORY
FACILITIES DIVISION

DRAWN BY	AD	DATE 2/18/20(
CHECKED BY	AD	2/18/20(
APPROVED BY	MCG	2/18/20(
CAD FILE PATH		
SCALE	Full	
DRAWING NO.	4B53E007C	SHEET FA
PROJECT NO.	FB4010	1 OF 1