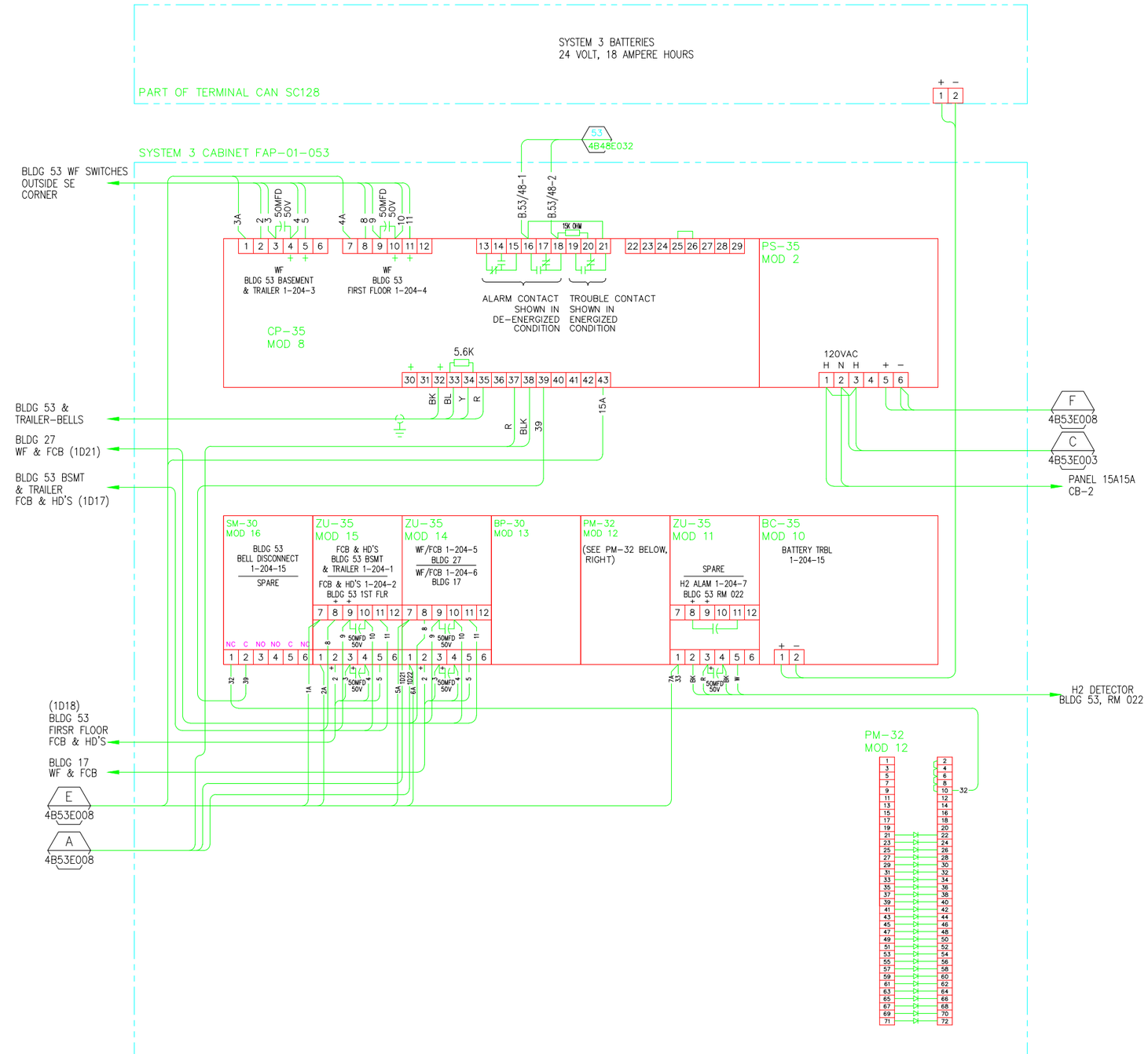

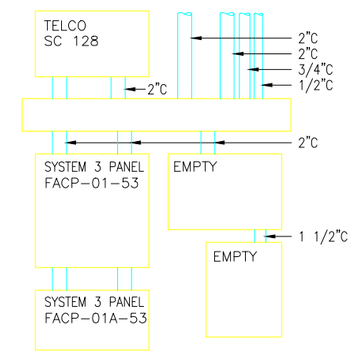

ELEVATION
NO SCALE

REFERENCE DRAWINGS:

FIRE ALARM CONNECTION DIAGRAM	4B53E001
LOGIC DIAGRAM MX-203, TR120	4B53E007
SYS 3+SR-35 CONNECTION DIGRAM	4B53E008
MOI + MID ARRANGEMENT	4B53E009
DIGITIZE NETWORK	4B48E032
MXL NETWORK	4B48E058

AS BUILT

H
5/14/2013

PROFESSIONAL SEAL
(IF REVISION, APPLIES ONLY TO REVISED WORK)

ISSUE (PROGRESS, ESTIMATE, BID, CONSTRUCTION, CONFORMED, REVISION, RECORD)

REVISION NUMBER	DRAWN BY	CHECKED BY	APPR'D BY	DATE	REMARKS
H	LDD	LDD	MCD	05/14/13	AS BUILT PER FIELD VERIFICATIONS
G				12/01/09	AS BUILT
F	MRC	AD	MCG	04/20/05	REVISED FOR MXL/DIGITIZE SYSTEMS
E	AD	AD	MCG	02/18/04	AS-BUILT, PHASE II FA UPGRADE
D	FWD	MCG	MCG	4/27/98	AS BUILT
C	LM		LM	5/5/97	AUTOCAD CONVERSION
B	LSR		BHS	12/86	REDRAWN AS BUILT

53 SYSTEM 3
FIRE ALARM SYSTEM
CONNECTION DIAGRAM

UNIVERSITY OF CALIFORNIA
LAWRENCE BERKELEY NATIONAL LABORATORY
FACILITIES DIVISION

DRAWN BY LSR	DATE 12/1/198	
CHECKED BY		
APPROVED BY BHS	12/1/198	
CAD FILE PATH		
SCALE As Noted		
DRAWING NO. 4B53E001H	SHEET FA	
PROJECT NO. FB4010	1 OF 1	