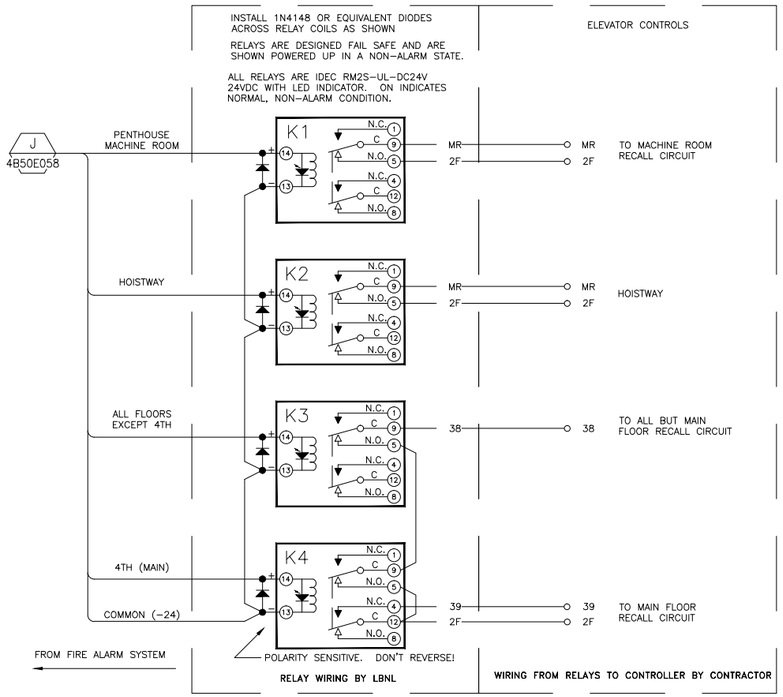

1 ELEVATOR RECALL RELAY WIRING DIAGRAM
SCALE: NONE

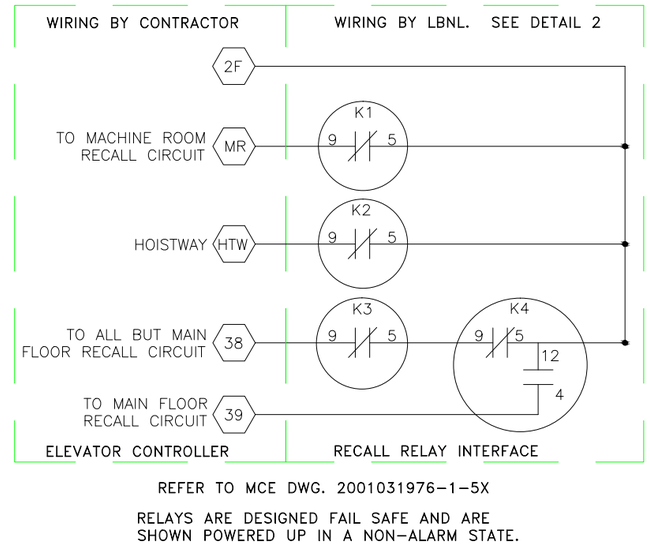

2 ELEVATOR RECALL WIRING DIAGRAM
SCALE: NONE

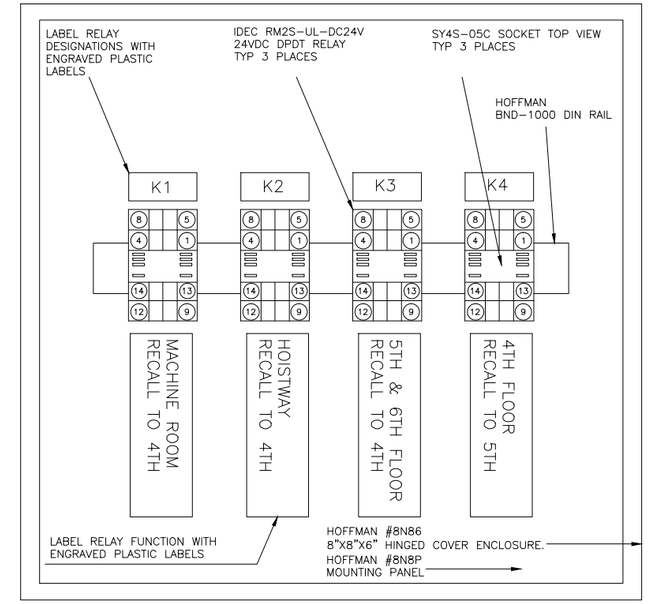

3 ELEVATOR RECALL RELAY MOUNTING DETAIL
SCALE: NONE

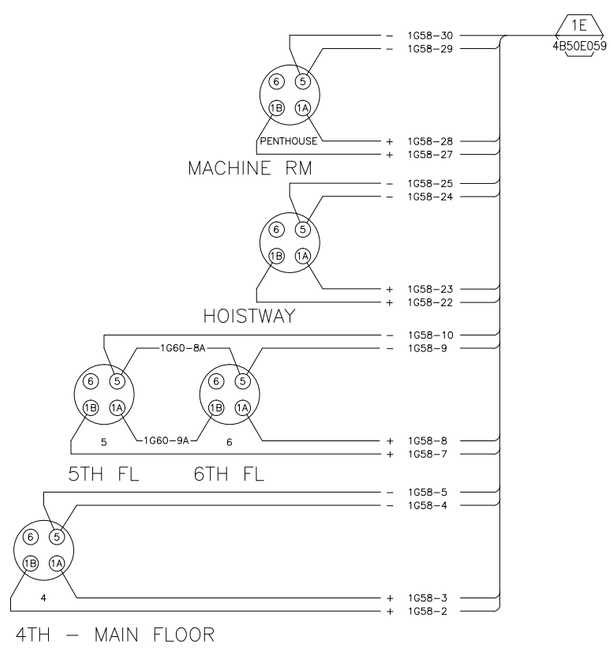

4 ELEVATOR LOBBY SMOKE DETECTOR WIRING DIAGRAM
SCALE: NONE

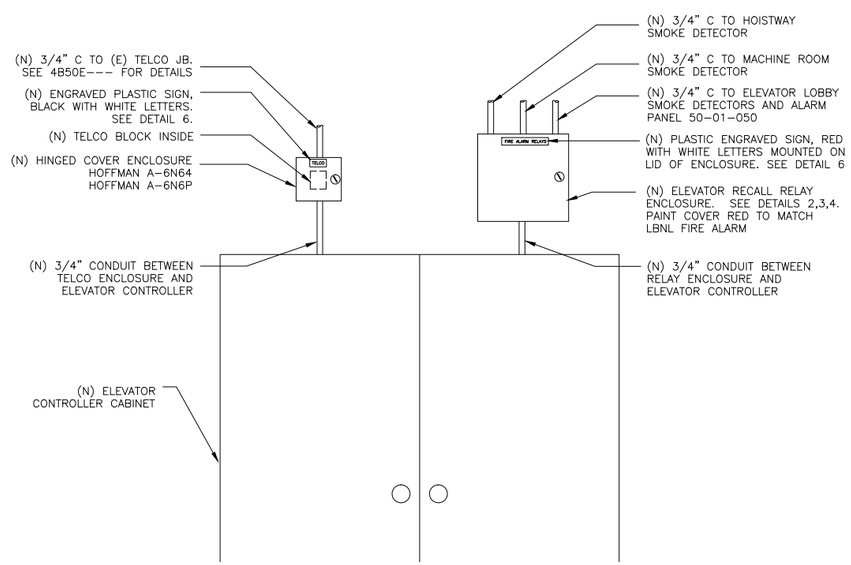

5 TYPICAL ENCLOSURE MOUNTING DETAIL
SCALE: NONE

FIRE ALARM
ELEVATOR RECALL RELAYS

TELCO

6 ENGRAVED SIGN DETAIL
SCALE: NONE

NOTE

LABEL ALL NEW AND MODIFIED WIRE AND CABLE IN THE FOLLOWING MANNER:

<ZONE NUMBER-WIRE SERIAL NUMBER>

THE WIRE SERIAL NUMBER SHALL BE A UNIQUE NUMBER BY ZONE. A LETTER SUFFIX MAY BE ADDED IF REQUIRED.

REFERENCE DWGS:

4B50E58	LOGIC DIAGRAM
4B50E59	SYSTEM 3 INTERCONNECTION DIAGRAM
4B50E60	TRANSMITTER 40 WIRING DIAGRAM
4B50E61	FIELD DEVICES INTERCONNECTION DIAGRAM
4B50E106	SYSTEM 3 MODULE WIRING SR33, PM32 & SR35
4B50E107	ELEVATOR RECALL SD & INTERFACE WIRING
4B50E108	RACEWAY, SD LOCATIONS AND ACCESS LOCATIONS

DISTRIBUTION LIST
2-ELECTRIC SHOP 76 (FILE I & II)
1-BLDG 90J (STICK FILE)

TITLE 2
3/1/2004

PROFESSIONAL SEAL (IF REVISION, APPLIES ONLY TO REVISED WORK)	ISSUE (PROGRESS, ESTIMATE, BID, CONSTRUCTION, CONFORMED, REVISION, AS-BUILT)	REVISION NUMBER	DRAWN BY	CHECKED BY	APPR'D BY	DATE	REMARKS

50 FAP 01-050
FIRE ALARM SYSTEM ELEVATOR RECALL
SD & INTERFACE RELAY WIRING DIAG

UNIVERSITY OF CALIFORNIA
LAWRENCE BERKELEY NATIONAL LABORATORY
FACILITIES DEPARTMENT

		DATE
DRAWN BY	GMS	3/1/2004
CHECKED BY	MCG	3/1/2004
APPROVED BY	MCG	3/1/2004
CAD FILE PATH	00017130	
SCALE	As Noted	
DRAWING NO.	4B50E107_	SHEET E1
PROJECT NO.	WF4723	1 OF 1