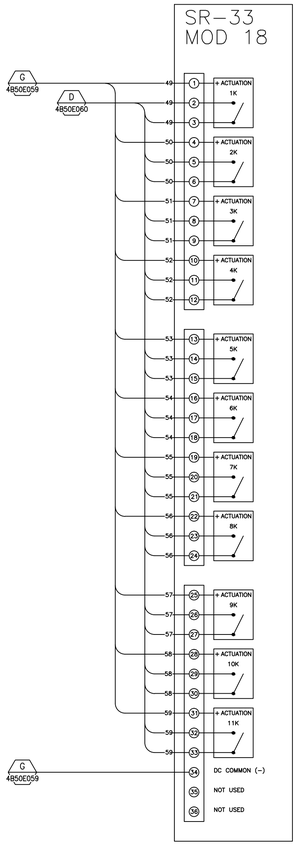

3 SR-33 RELAY BOARD
SCALE: NONE

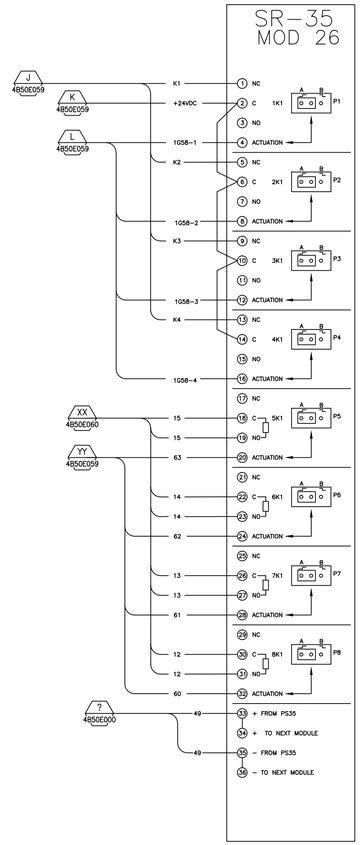

2 SR-35 RELAY BOARD
SCALE: NONE

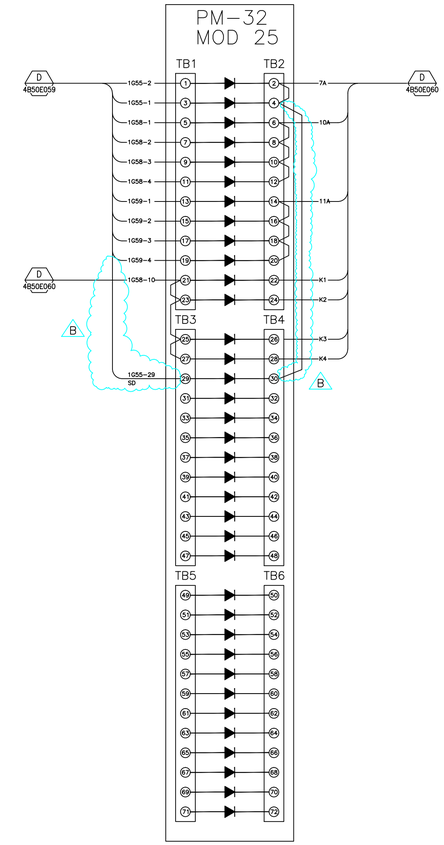

1 PM-32 DIODE BOARD
SCALE: NONE

REFERENCE DWGS:

4B50E58	LOGIC DIAGRAM
4B50E59	SYSTEM 3 INTERCONNECTION DIAGRAM
4B50E60	TRANSMITTER 40 WIRING DIAGRAM
4B50E61	FIELD DEVICES INTERCONNECTION DIAGRAM
4B50E106	SYSTEM 3 MODULE WIRING SR33, PM32 & SR35
4B50E107	ELEVATOR RECALL SD & INTERFACE WIRING
4B50E108	RACEWAY, SD LOCATIONS AND ACCESS LOCATIONS

DISTRIBUTION

2-FACILITIES M&O ELECTRIC SHOP BLDG. 76 - FILE I & II
ORIGINAL-FLAT FILE B90F

TITLE 2
CONSTRUCTION
B
7/7/2005

REVISION NUMBER	DRAWN BY	CHECKED BY	APPR'D BY	DATE	REMARKS
B	VDA	MCG	MCG	6/30/05	ADD SMOKE DET. TEL. CLOSET 5TH FLR RM 5070 (#FC5012)
A	AD	MCG	MCG	04/14/05	REVISED FOR MXL/DIGITIZE SYSTEMS

PROFESSIONAL SEAL (IF REVISION, APPLIES ONLY TO REVISED WORK)

ISSUE (PROGRESS, ESTIMATE, BID, CONSTRUCTION, CONFORMED, REVISION, RECORD)

50 FAP 01-050
FIRE ALARM SYSTEM
SR33,PM32 & SR35 INTERCONN. DIAG

UNIVERSITY OF CALIFORNIA
LAWRENCE BERKELEY NATIONAL LABORATORY
FACILITIES DIVISION

DRAWN BY	GMS	DATE 3/1/2004
CHECKED BY	MCG	3/1/2004
APPROVED BY	MCG	3/1/2004
CAD FILE PATH	00019782	
SCALE	As Noted	
DRAWING NO.	4B50E106B	SHEET E1
PROJECT NO.	WF4723	1 OF 1