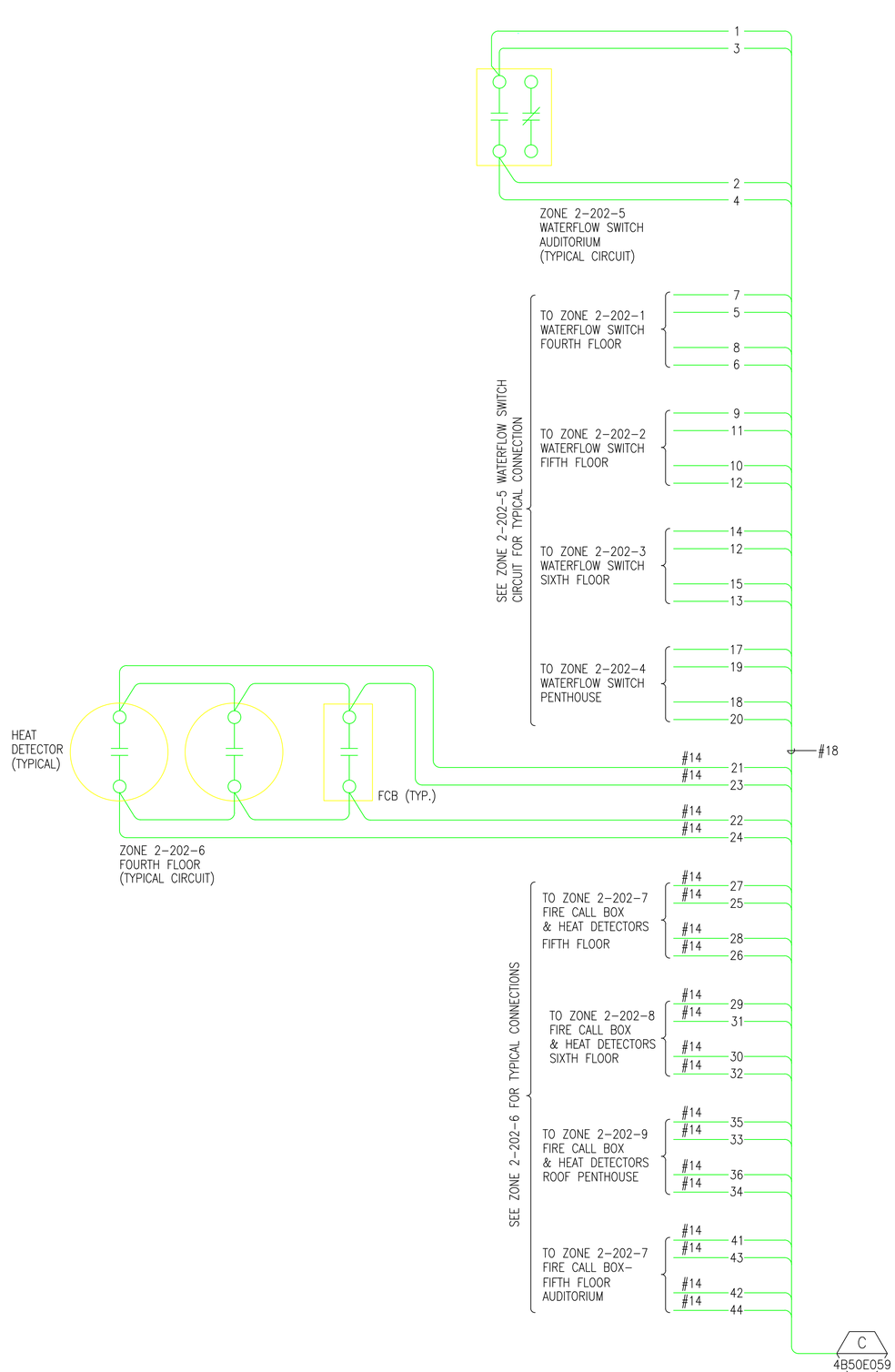

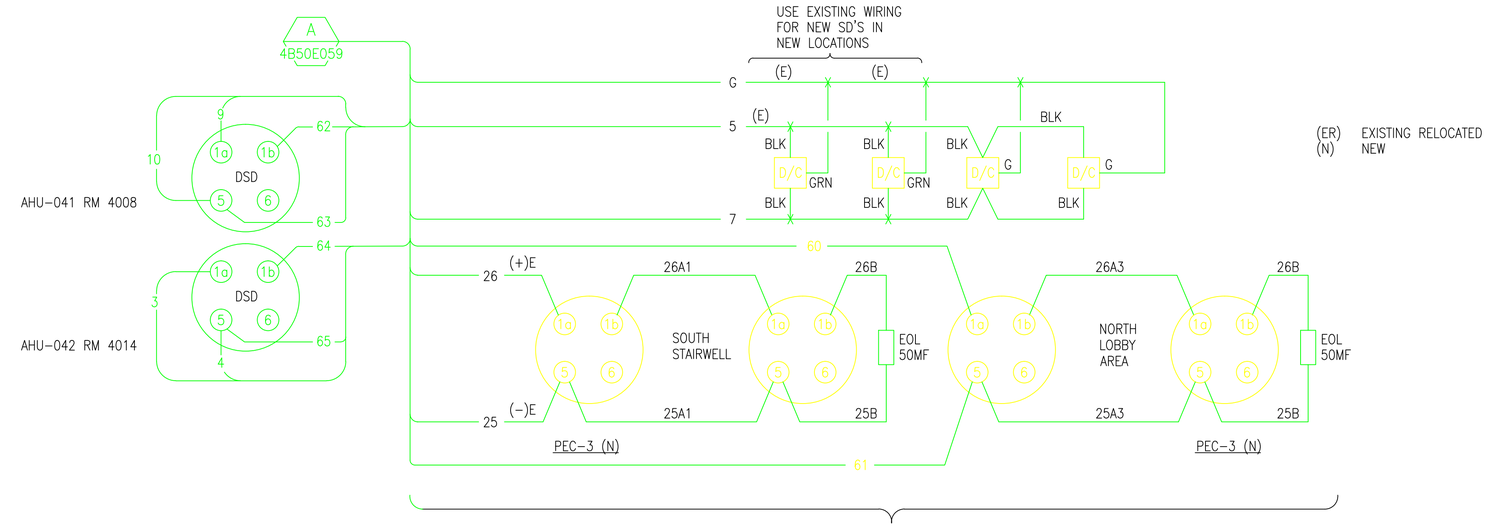

ZONE IG59 – LOBBY SMOKE DETECTOR
& AHU-041 & 042

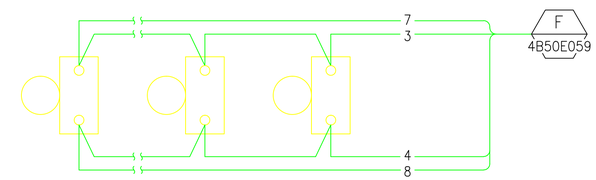

FIRE ALARM BELLS, 24VDC

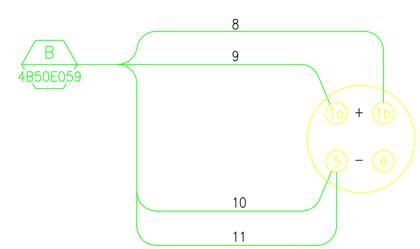

SMOKE DETECTOR
5TH FLR RM 5070

REFERENCE DWGS:

4B50E58	LOGIC DIAGRAM
4B50E59	SYSTEM 3 INTERCONNECTION DIAGRAM
4B50E60	TRANSMITTER 40 WIRING DIAGRAM
4B50E61	FIELD DEVICES INTERCONNECTION DIAGRAM
4B50E106	SYSTEM 3 MODULE WIRING SR33, PM32 & SR35
4B50E107	ELEVATOR RECALL SD & INTERFACE WIRING
4B50E108	RACEWAY, SD LOCATIONS AND ACCESS LOCATIONS
4B50E097	SYSTEM 3 INTERCONNECTION WIRING
4B50E119	MID/MOI ARRANGEMENT & INTERCONNECTION WIRING

AS BUILT
G
5/8/2013

REVISION NUMBER	DRAWN BY	CHECKED BY	APPR'D BY	DATE	REMARKS
G	LDD	LDD	MCD	05/08/13	AS BUILT PER FIELD VERIFICATIONS
F	VDA	MCG	MCG	6/30/05	ADD SMOKE DETECTOR TELEP. CLOSET RM 5070
E	AD	MCG	MCG	4/13/04	REVISED FOR MXL/DIGITIZE SYSTEMS
D	GMS	MCG	MCG	2/27/04	CHANGE SUP'V. REMOVE HV SMOKES, REZONE 1C59
C	IPM		VA	11/08/99	AS BUILT
B	DJC		VA	7/14/99	ADDED SD'S FOR AHU-041N& 042 (PER FD #9088)
A	LM		MCG	3/27/97	AUTOCAD CONVERSION OF DWG. 6B50E027 REV F

PROFESSIONAL SEAL (IF REVISION, APPLIES ONLY TO REVISED WORK)
ISSUE (PROGRESS, ESTIMATE, BID, CONSTRUCTION, CONFORMED, REVISION, RECORD)

50 FAP 01-050
FIRE ALARM SYSTEM
FIELD DEVICES INTERCONN. DIAG

UNIVERSITY OF CALIFORNIA
LAWRENCE BERKELEY NATIONAL LABORATORY
FACILITIES DIVISION

DRAWN BY	LM	DATE 3/18/1997
CHECKED BY		
APPROVED BY	MCG	3/27/1997
CAD FILE PATH		
SCALE	As Noted	
DRAWING NO.	4B50E061G	SHEET E1
PROJECT NO.	WF4723	1 OF 1