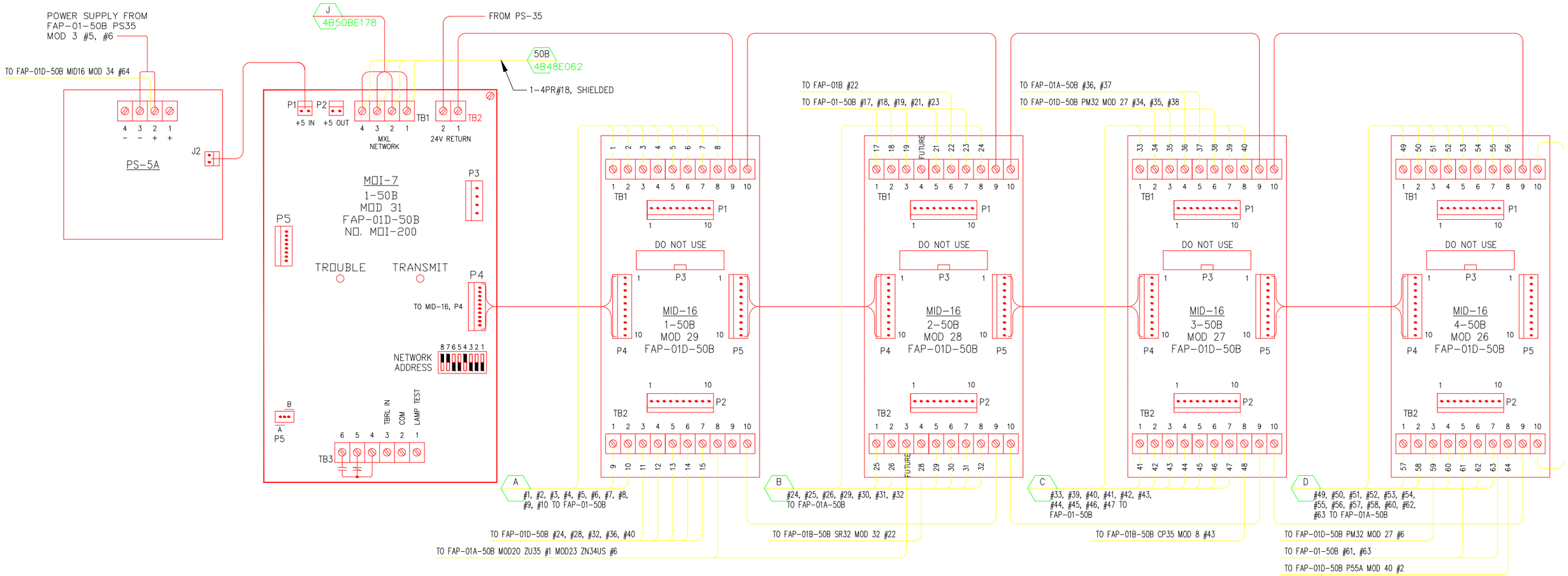

OLD ADDRESS	DESCRIPTION	MID-16 TERMINATION	MODULE TYPE & NO.	MXL NO. 02-50B ADDRESS
2B49	WFS, 50B BASEMENT	TB1, No. 1	MID 16, 1-50B	2-200-1
2B50	WFS, 50B FIRST FLOOR	TB1, No. 2	MID 16, 1-50B	2-200-2
2B51	WFS, 50B SECOND FLOOR	TB1, No. 3	MID 16, 1-50B	2-200-3
2B52	WFS, 50B THIRD FLOOR	TB1, No. 4	MID 16, 1-50B	2-200-4
2B53	WFS, 50B FOURTH FLOOR	TB1, No. 5	MID 16, 1-50B	2-200-5
2B54	WFS, 50B FIFTH FLOOR	TB1, No. 6	MID 16, 1-50B	2-200-6
2B55	WFS, 50B SIXTH FLOOR	TB1, No. 7	MID 16, 1-50B	2-200-7
2B56	WFS, 50B PENTHOUSE	TB1, No. 8	MID 16, 1-50B	2-200-8
2B57	50B ROOM 1275 PRE-ACTION	TB2, No. 1	MID 16, 1-50B	2-200-9
2B58	WFS, 50D	TB2, No. 2	MID 16, 1-50B	2-200-10
2B59	ANALASER LEVEL No. 1	TB2, No. 3	MID 16, 1-50B	2-200-11
2B60	ANALASER LEVEL No. 2	TB2, No. 4	MID 16, 1-50B	2-200-12
2B61	ANALASER LEVEL No. 3	TB2, No. 5	MID 16, 1-50B	2-200-13
2B62	140° HEAT DETECTOR 50B-0248	TB2, No. 6	MID 16, 1-50B	2-200-14
2B63	SD & FCB 50B-0248	TB2, No. 7	MID 16, 1-50B	2-200-15
2B64	B50B FCB ROOM 2265	TB2, No. 8	MID 16, 1-50B	2-200-16

OLD ADDRESS	DESCRIPTION	MID-16 TERMINATION	MODULE TYPE & NO.	MXL NO. 02-50B ADDRESS
2D49	WFS, 50F FIRST FLOOR	TB1, No. 1	MID 16, 2-50B	2-200-17
2D50	WFS, 50F GARAGE	TB1, No. 2	MID 16, 2-50B	2-200-18
2D51	WFS, 50B DELUGE, WINDOWS	TB1, No. 3	MID 16, 2-50B	2-200-19
2D52	NOT USED	TB1, No. 4	MID 16, 2-50B	2-200-20
2D53	FCB NORTH & SOUTH ENTRANCE	TB1, No. 5	MID 16, 2-50B	2-200-21
2D54	FCB AT SUB-STATION	TB1, No. 6	MID 16, 2-50B	2-200-22
2D55	SD, DOOR CLOSURE, N: ENTRANCE	TB1, No. 7	MID 16, 2-50B	2-200-23
2D56	HSSD TROUBLE ROOM 2265	TB1, No. 8	MID 16, 2-50B	2-200-24
2D57	HSSD LEVEL 1 ROOM 2265	TB2, No. 1	MID 16, 2-50B	2-200-25
2D58	HSSD LEVEL 2 ROOM 2265	TB2, No. 1	MID 16, 2-50B	2-200-26
2D59	B50B MP EPO ROOM 2265	TB2, No. 3	MID 16, 2-50B	2-200-27
2D60	TROUBLE, HALON ABORT BUTTON 1275	TB2, No. 4	MID 16, 2-50B	2-200-28
2D61	SUPERVISION, 50F GARAGE ISO VALVE	TB2, No. 5	MID 16, 2-50B	2-200-29
2D62	SUPERVISION, 50F 1st ISO VALVE	TB2, No. 6	MID 16, 2-50B	2-200-30
2D63	SUPERVISION DELUGE RISER VALVE	TB2, No. 7	MID 16, 2-50B	2-200-31
2D64	HSSD LEVEL 3 ROOM 2265	TB2, No. 8	MID 16, 2-50B	2-200-32

OLD ADDRESS	DESCRIPTION	MID-16 TERMINATION	MODULE TYPE & NO.	MXL NO. 02-50B ADDRESS
2B65	DUCT DETECTOR, AC001 50F	TB1, No. 1	MID 16, 3-50B	2-200-33
2B66	SD'S, ROOMS 1215,1232,1237,1245	TB1, No. 2	MID 16, 3-50B	2-200-34
2B67	B50B SD RM 1275 HALON PUMP	TB1, No. 3	MID 16, 3-50B	2-200-35
2B68	SUPERVISION ROOM 1275 HALON ON	TB1, No. 4	MID 16, 3-50B	2-200-36
2B69	PRE ACTION PUMP 1275	TB1, No. 5	MID 16, 3-50B	2-200-37
2B70	SD'S ROOM 2275	TB1, No. 6	MID 16, 3-50B	2-200-38
2B71	FCB, 50D	TB1, No. 7	MID 16, 3-50B	2-200-39
2B72	FCB'S & HD,S, BASEMENT 50B	TB1, No. 8	MID 16, 3-50B	2-200-40
2B73	FCB'S & HD'S, FIRST FLOOR 50B	TB2, No. 1	MID 16, 3-50B	2-200-41
2B74	FCB'S & HD'S, SECOND FLOOR 50B	TB2, No. 2	MID 16, 3-50B	2-200-42
2B75	FCB'S & HD'S, THIRD FLOOR 50B	TB2, No. 3	MID 16, 3-50B	2-200-43
2B76	FCB'S, HD'S & SD'S FORTH FLOOR 50B	TB2, No. 4	MID 16, 3-50B	2-200-44
2B77	FCB'S, HD'S & SD'S FIFTH FLOOR 50B	TB2, No. 5	MID 16, 3-50B	2-200-45
2B78A	FCB'S, HD'S & SD'S SIXTH FLOOR 50B	TB2, No. 6	MID 16, 3-50B	2-200-46
2B78B	FCB'S, HD'S, PENTHOUSE 50B	TB2, No. 7	MID 16, 3-50B	2-200-47
2B79	FAP-01B 1275 TROUBLE HALON	TB2, No. 8	MID 16, 3-50B	2-200-48

OLD ADDRESS	DESCRIPTION	MID-16 TERMINATION	MODULE TYPE & NO.	MXL NO. 02-50B ADDRESS
2B81	SUPERVISION, RISER VALVE W. ENTRANCE	TB1, No. 1	MID 16, 4-50B	2-200-49
2B82	SUPERVISION, ISO VALVE BASEMENT	TB1, No. 2	MID 16, 4-50B	2-200-50
2B83	SUPERVISION, ISO VALVE, 1st FLOOR	TB1, No. 3	MID 16, 4-50B	2-200-51
2B84	SUPERVISION, ISO VALVE, 2nd FLOOR	TB1, No. 4	MID 16, 4-50B	2-200-52
2B85	SUPERVISION, ISO VALVE, 3rd FLOOR	TB1, No. 5	MID 16, 4-50B	2-200-53
2B86	SUPERVISION, ISO VALVE, 4th FLOOR	TB1, No. 6	MID 16, 4-50B	2-200-54
2B87	SUPERVISION, ISO VALVE, 5th FLOOR	TB1, No. 7	MID 16, 4-50B	2-200-55
2B88	SUPERVISION, ISO VALVE, 6th FLOOR	TB1, No. 8	MID 16, 4-50B	2-200-56
2B89	SUPERVISION, ISO VALVE PENTHOUSE	TB2, No. 1	MID 16, 4-50B	2-200-57
2B90	SUPERVISION H.A.D. & RISER	TB2, No. 2	MID 16, 4-50B	2-200-58
2B91	ELEVATOR CAPTURE BASEMENT	TB2, No. 3	MID 16, 4-50B	2-200-59
2B92	SUP. ISO VALVE, 2nd FLOOR BALCONY	TB2, No. 4	MID 16, 4-50B	2-200-60
2B93	SMOKE DETECTOR AT FACP RM243	TB2, No. 5	MID 16, 4-50B	2-200-61
2B94	TROUBLE, 1275 ANALASER	TB2, No. 6	MID 16, 4-50B	2-200-62
2B95	SYSTEM 3, COMMON TROUBLE	TB2, No. 7	MID 16, 4-50B	2-200-63
2B96	RIBBON UNPLUGGED	TB2, No. 8	MID 16, 4-50B	2-200-64

ASBUILT
REVISION
E
05/15/2009

PROFESSIONAL SEAL (IF REVISION, APPLIES ONLY TO REVISED WORK)

ISSUE (PROGRESS, ESTIMATE, BID, CONSTRUCTION, CONFORMED, REVISION, RECORD)

REVISION NUMBER	DRAWN BY	CHECKED BY	APPR'D BY	DATE	REMARKS
E				05/15/09	AS BUILT
D				09/30/08	AS BUILT
C	AD	LDD	MCD	11/12/07	FIRE ALARM SYSTEM UPGRADE
B	AD	LDD	MCD	03/06/06	REVISED FOR MXL COPPER LOOP
A	AD	AD	LDD	01/03/06	ADDED REFERENCE

50B
REPLACEMENT FIRE ALARM SYSTEM
MOI/MID MODULE ARRANGEMENT

UNIVERSITY OF CALIFORNIA
LAWRENCE BERKELEY NATIONAL LABORATORY
FACILITIES DIVISION

DRAWN BY AD — DATE 5/15/200
CHECKED BY — 5/15/200
APPROVED BY — 5/15/200
CAD FILE PATH 00022844
SCALE Full
DRAWING NO. 4B50BE255E
SHEET 1 OF 1
PROJECT NO. FC7500