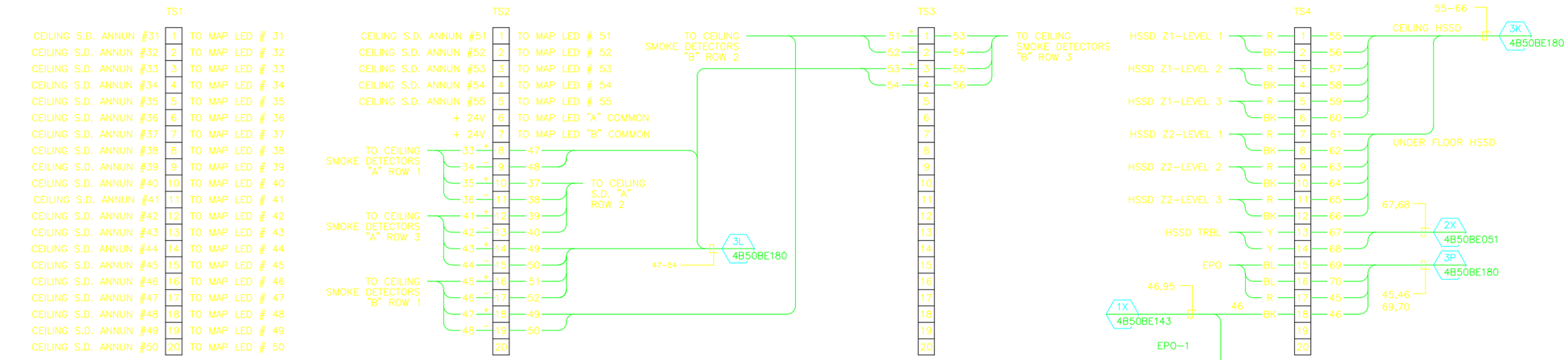

UPPER ANNUNCIATOR FIRE ALARM CEILING MAP TERMINAL CAN RM 1275

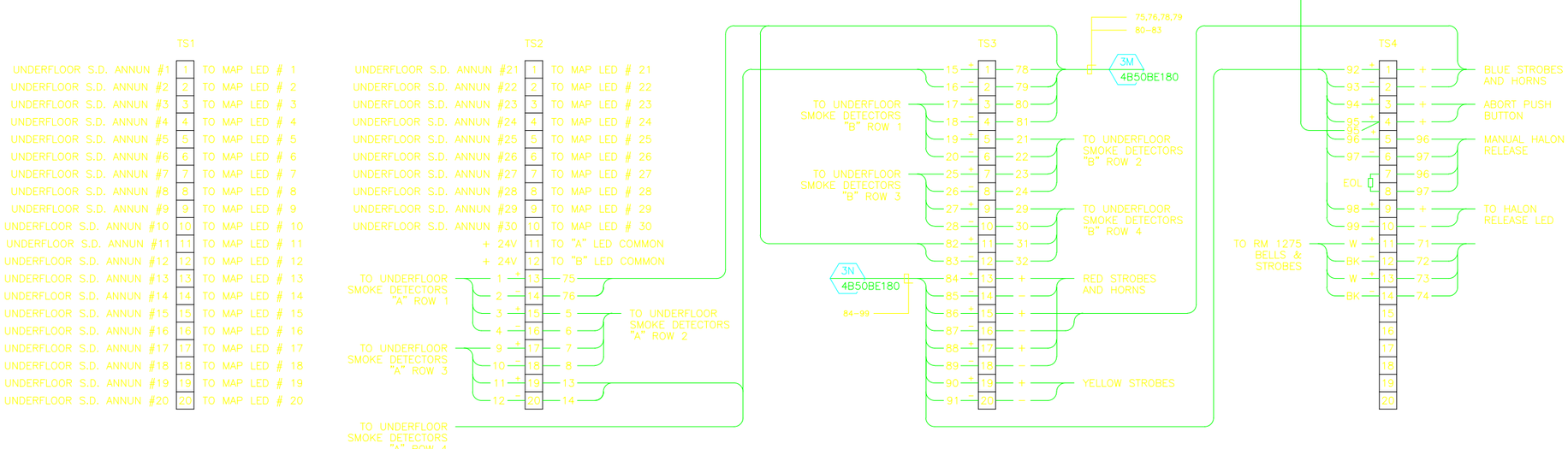

LOWER ANNUNCIATOR FIRE ALARM UNDERFLOOR MAP TERMINAL CAN RM 1275

REVISION NUMBER	DRAWN BY	CHECKED BY	APPR'D BY	DATE	REMARKS

50B NERSC MODIFICATIONS
SUPER COMPUTER ROOM
ANNUNCIATOR PANEL DIAG

UNIVERSITY OF CALIFORNIA LAWRENCE BERKELEY LABORATORY
FACILITIES DEPARTMENT

DRAWN BY	ROB	DATE 7/24/96
CHECKED BY	MCG	7/24/96
APPROVED BY	MCG	7/24/96
CAD FILE PATH	00001344	
SCALE	NONE	
DRAWING NO.	4B50BE183	SHEET E1
PROJECT NO.	1299077	1 OF 1