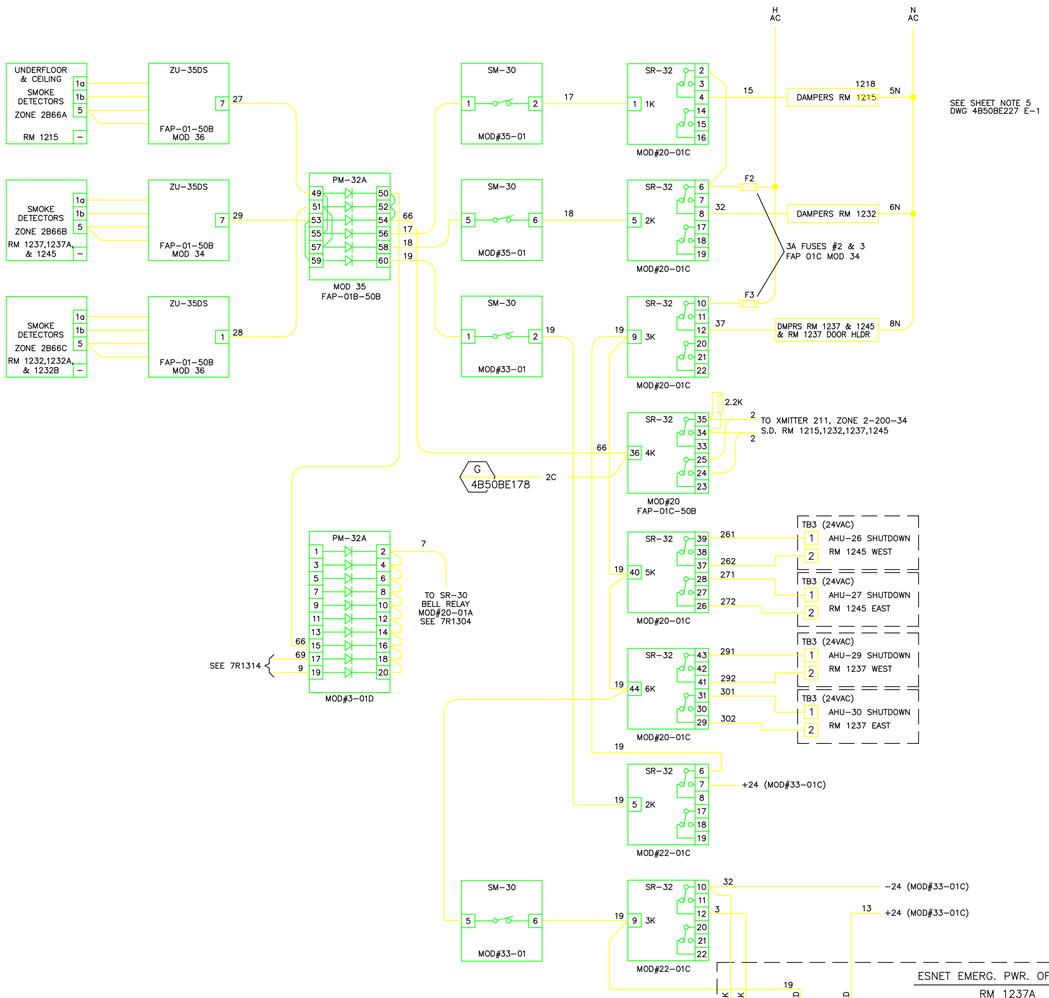

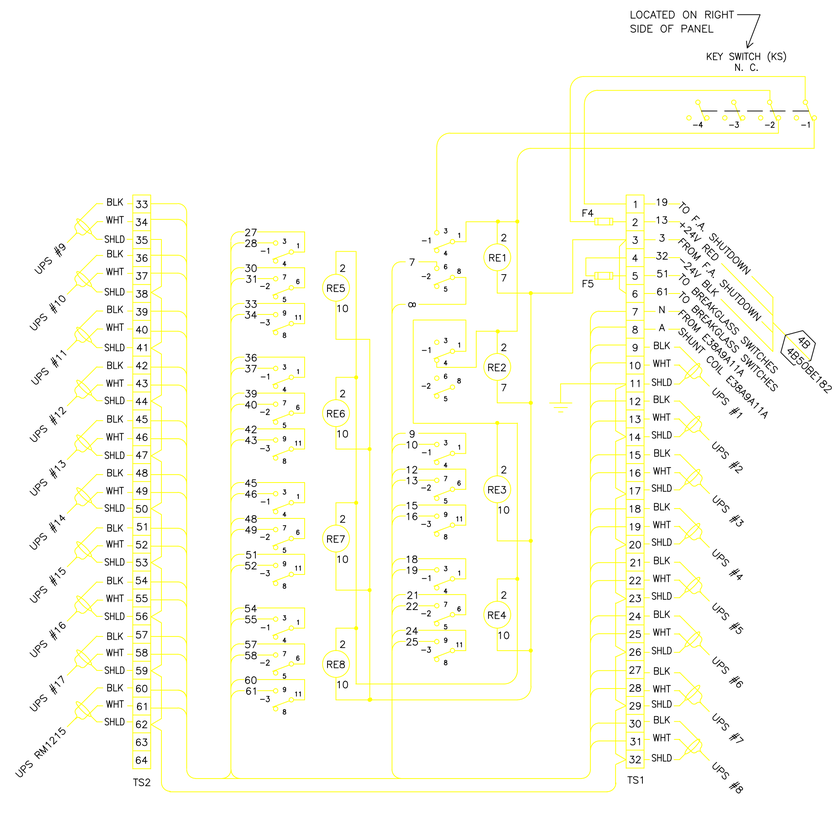

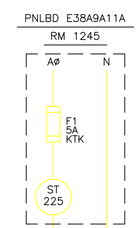

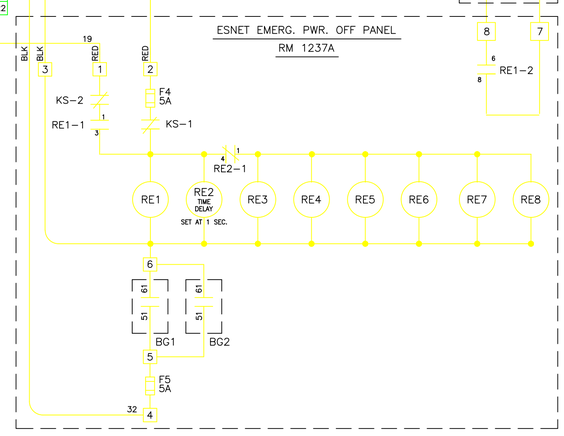

ESNET EMERGENCY POWER OFF PANEL 50B-1237A

WIRING DIAGRAM ALSO INDICATES INSIDE PANEL LAYOUT

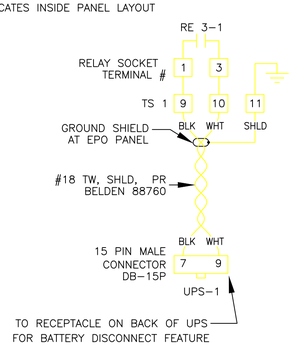

PANEL PARTS LIST

BG1 & BG2	BREAK GLASS SWITCH, AAMES NC-SE-E
RE 1	RELAY, 2P2T, 24VDC KRP-14DG
RE 2	TIME DELAYRELAY, 1 SEC, 24VDC, CDC21
RE 3 THRU 8	RELAY, 3P3T, 24VDC KRP-14DG
	ALL RELAYS BY POTTER & BRUMFIELD
TS1 & TS2	TERMINAL STRIP, BUCHANAN
ENCLOSURE	NEMA 1, HINGED COVER, WITH MOUNTING PANEL FOR DEVICES, 16"W X 20"H X 6"D (NOMINAL)

NOTE: PANEL TO BE PAINTED BLACK AND LABELED WITH WHITE LETTERING – "ESNET EMERGENCY POWER OFF RELAY PANEL".

TYPICAL UPS SHUTDOWN CABLE ASSEMBLY & CONNECTION

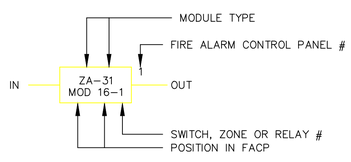

1ST FLR SUPPORT SPACES & ESNET AREA FIRE ALARM LOGIC & EPO DIAGRAM

AS BUILT

E

5/13/2013

REVISION NUMBER	DRAWN BY	CHECKED BY	APPR'D BY	DATE	REMARKS
D	AD	LDD	MCD	11/12/07	FIRE ALARM SYSTEM UPGRADE
C	MRC	AD	MCG	6/22/04	PHASE III FA UP-GRADE
B	VDA	VDA	MCG	4/24/01	RELOCATE FD & ADD (N) UPS
A	LDD	LDD	MCG	9.18.96	AS BUILT

PROFESSIONAL SEAL (IF REVISION, APPLIES ONLY TO REVISED WORK)

ISSUE (PROGRESS, ESTIMATE, BID, CONSTRUCTION, CONFORMED, REVISION, RECORD)

50B NERSC MODIFICATIONS
1st FLR SUPPORT SPACES/ESNET
FIRE ALARM LOGIC & EPO WIRING

UNIVERSITY OF CALIFORNIA
LAWRENCE BERKELEY NATIONAL LABORATORY
FACILITIES DIVISION

		DATE
DRAWN BY	LDD	5/5/1996
CHECKED BY	LDD	5/5/1996
APPROVED BY	ROB	8/6/1996
CAD FILE PATH		
SCALE	As Noted	
DRAWING NO.	4B50BE174E	
PROJECT NO.	FB4010	
SHEET	1 OF 1	