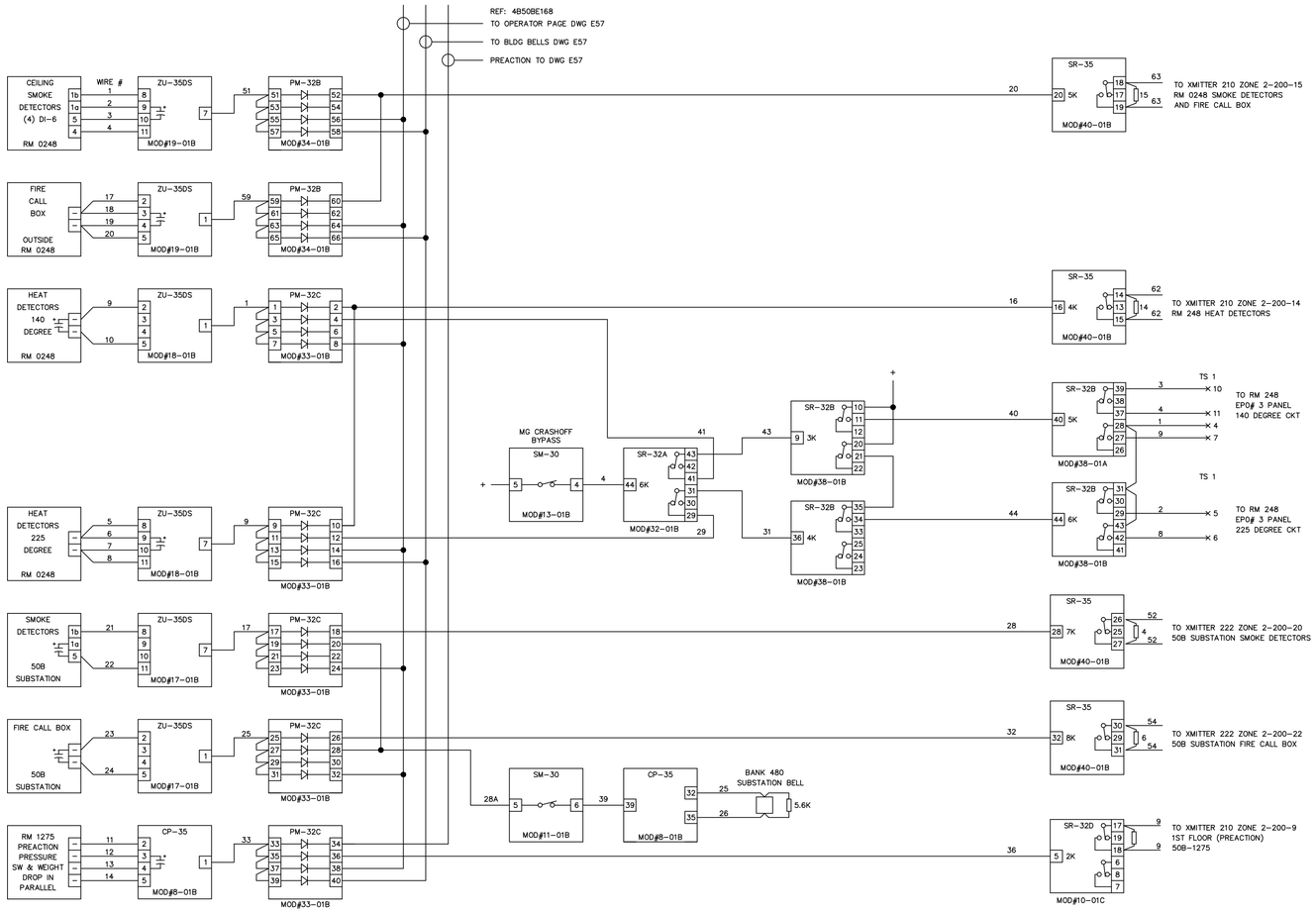

	PAGE OPERATOR	SEND ALARM TO BUILDING 48	RING BELLS, EVACUATE BUILDING	ELECTRONIC PAGE AND ALARM	TRIP ROOM POWER MANUAL (NOTE 1)	TRIP ROOM POWER AUTOMATIC (NOTE 2)	SPRINKLER WATER DISCHARGE			
ANY CEILING SMOKE DETECTOR	●	●	●							
EMCS 105 DEGREE ROOM TEMPERATURE SENSOR	●			●						
FIXED TEMPERATURE HEAT DETECTOR 140 DEGREE	●	●		●	●					
FIXED TEMPERATURE HEAT DETECTOR 225 DEGREE	●	●	●	●						
CROSS ZONED 140/225 DEGREE HEAT DETECTOR	●	●	●			●				
SPRINKLER HEAD ACTIVATION @ 286 DEGREE	●	●	●				●			

NOTE 1: MG ROOM TRIP BUTTON IN 50B-1275 IS NOW ACTIVE AND IF PUSHED WILL TRIP ALL CIRCUITS LISTED UNDER EPO 3 IN THE TABLE BELOW.

NOTE 2: ALL CIRCUITS LISTED FOR EPO 3 IN THE TABLE BELOW WILL BE TRIPPED.

RM 0248 FIRE ALARM CONTROL LOGIC DIAGRAM

EPO #3 TRIPS THE FOLLOWING:	BREAKER	LOAD	ROOM
	480A4	MG #1	50B SUB
	480A6	MG #2	50B SUB
	480A7	480A7A	50B SUB
		RCU-5	248
		IOS\ISSD HEAT EXCHANGER	1275
		C90 HEAT EXCHANGER	1275
		RM 248 EXHAUST FANS	248
		LCW PUMPS	50F GARAGE
	480A8	MG #3	248

AS BUILT

D
5/13/2013

REVISION NUMBER	DRAWN BY	CHECKED BY	APPR'D BY	DATE	REMARKS
D	LDD	LDD	MCD	05/13/13	AS BUILT PER FIELD VERIFICATIONS
C	AD	LDD	MCD	11/9/07	FIRE ALARM SYSTEM UPGRADE
B	ROB	MCG	MCG	9/30/96	AS BUILT

PROFESSIONAL SEAL (IF REVISION, APPLIES ONLY TO REVISED WORK)

ISSUE (PROGRESS, ESTIMATE, BID, CONSTRUCTION, CONFORMED, REVISION, RECORD)

50B NERSC MODIFICATIONS
GENERATOR ROOM 50B-248
FIRE ALARM LOGIC

UNIVERSITY OF CALIFORNIA
LAWRENCE BERKELEY NATIONAL LABORATORY
FACILITIES DIVISION

		DATE
DRAWN BY	ROB	11/11/1996
CHECKED BY	MCG	4/17/1996
APPROVED BY	MCG	4/18/1996
CAD FILE PATH		
SCALE	As Noted	
DRAWING NO.	4B50BE169D	
PROJECT NO.	FB4010	
SHEET	1 OF 1	