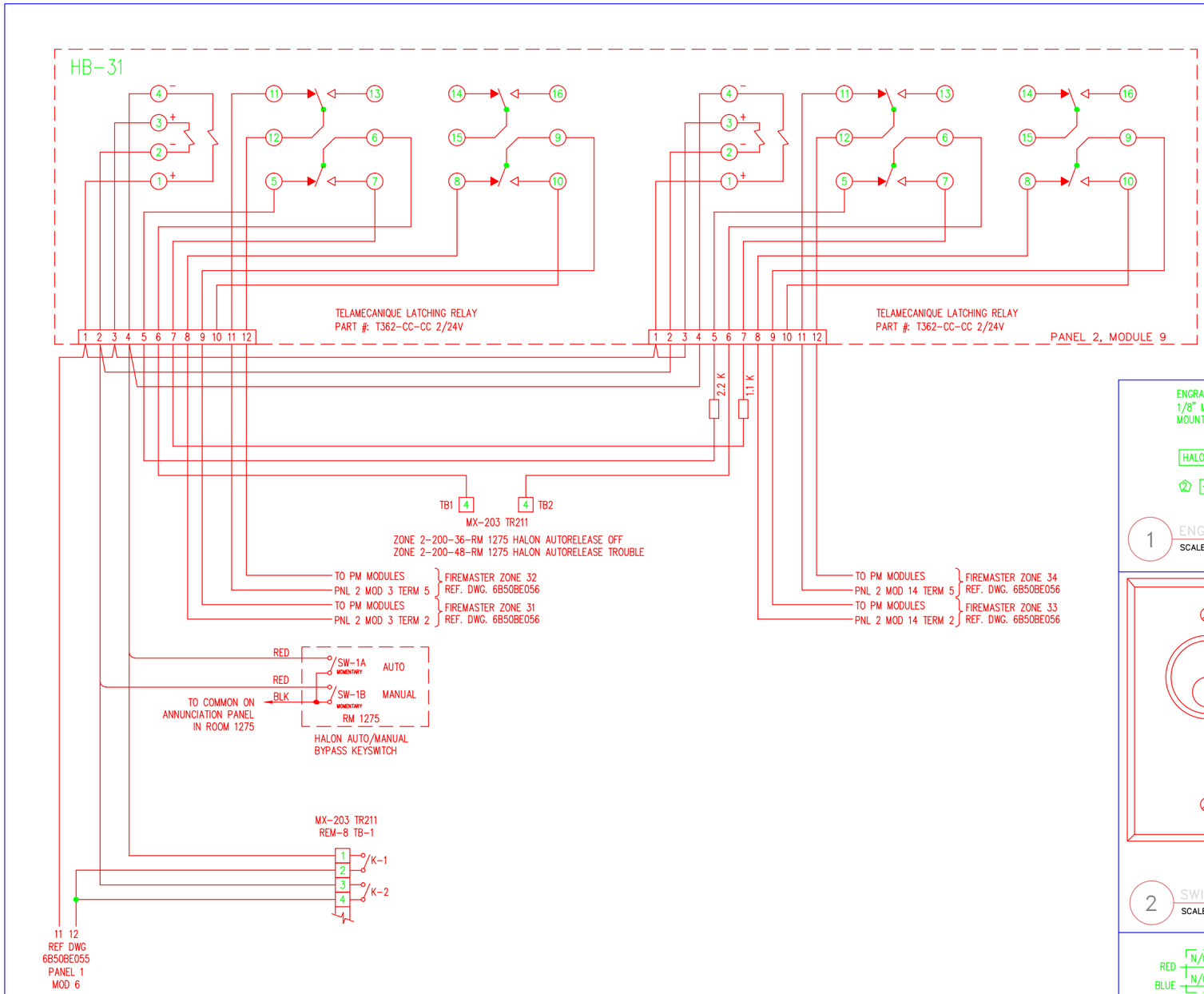

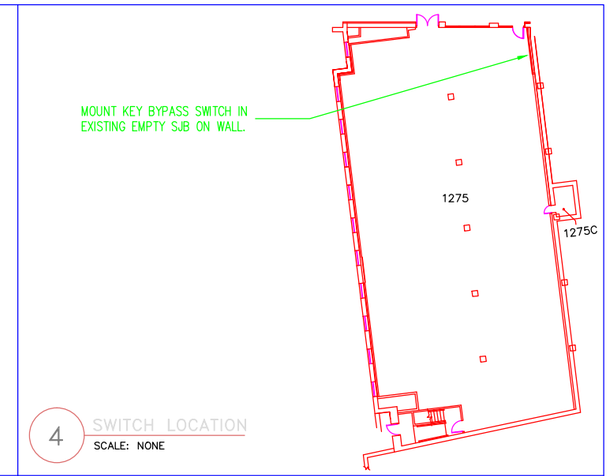

4 SWITCH LOCATION
SCALE: NONE

ENGRAVED SIGNS AS FOLLOWS:
1/8" MINIMUM WHITE LETTERS ON RED BACKGROUND.
MOUNT SIGNS AS NOTED. SIZE SIGNS TO FIT

① HALON AUTO MODE BYPASS SWITCH

② ← AUTO MANUAL → ③

1 ENGRAVED SIGN LEDGEND
SCALE: NONE

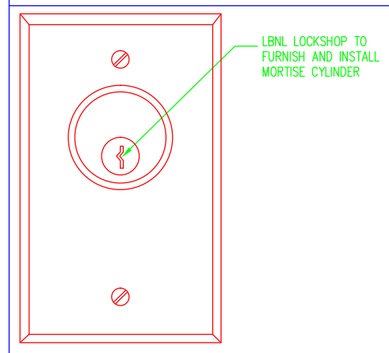

2 SWITCH MODIFICATION
SCALE: NONE

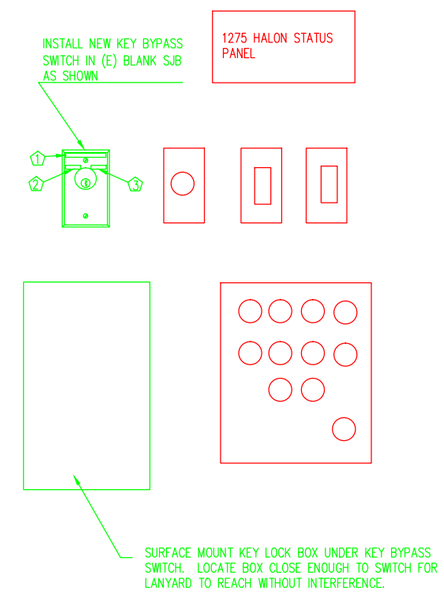

5 MOUNTING ELEVATION
SCALE: NONE

3 KEYSWITCH WIRING DIAGRAM
SCALE: NONE

REFERENCE DWGS:

4B50BE047	LIGIC DIAGRAM
6B50BE055	WIRING DIAGRAM
6B50BE055	WIRING DIAGRAM

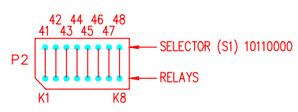

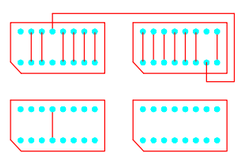

TR211 PROGRAM PLUGS

REVISION NUMBER	DRAWN BY	CHECKED BY	APPR'D BY	DATE	REMARKS
E	LDD	LDD	MCD	05/13/13	AS BUILT PER FIELD VERIFICATIONS
D	GMS	MCG	MCG	5-7-03	REMOVED KEY BYPASS LED'S & AS BUILT
C	GMS	MCG	MCG	4/3/03	ADD MANUAL/AUTO KEY BYPASS SWITCH
B	LM	ROB	MCG	7/16/98	AUTOCAD CONVERSION
A	RG		RMG	8/31/90	AS BUILT

50B RM 1275 FIRE ALARM SYSTEM HALON REMOTE AUTO/MANUAL WIRING DIAGRAM

UNIVERSITY OF CALIFORNIA LAWRENCE BERKELEY LABORATORY
FACILITIES DEPARTMENT

		DATE
DRAWN BY	R.GRAZIER	7-25-90
CHECKED BY	–	–
APPROVED BY	RMG	7-27-90
CAD FILE PATH		
SCALE	NONE	
DRAWING NO.	4B50BE078E	SHEET E1
PROJECT NO.	FA8040	1 OF 1