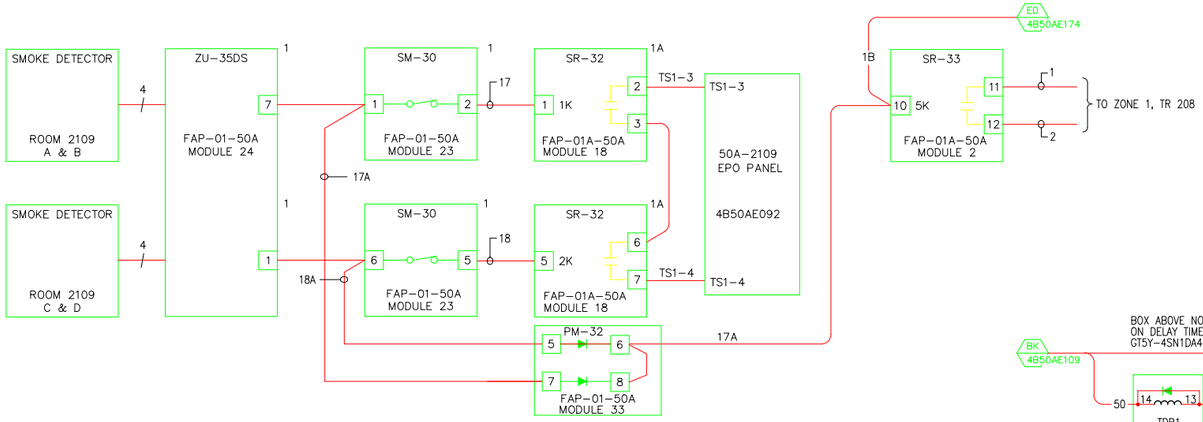

DETAIL 1 – BLDG ZONE 2-201-17

REF 4B50AE045

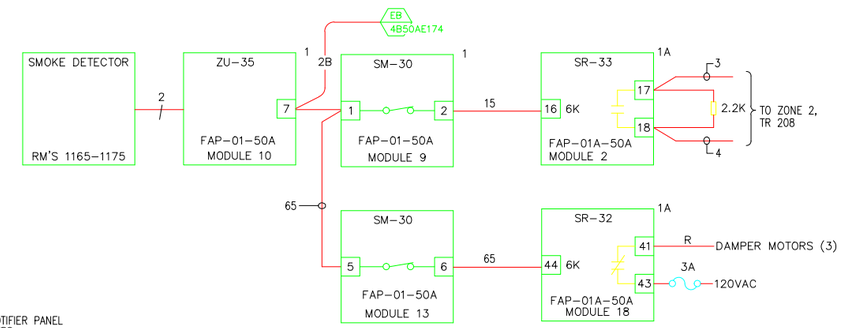

DETAIL 2 – BLDG ZONE 2-201-18

REF 4B50AE045

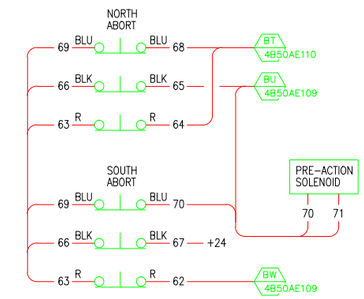

DETAIL 5
PRE-ACTION ABORT RM 1156

REF 4B50AE049

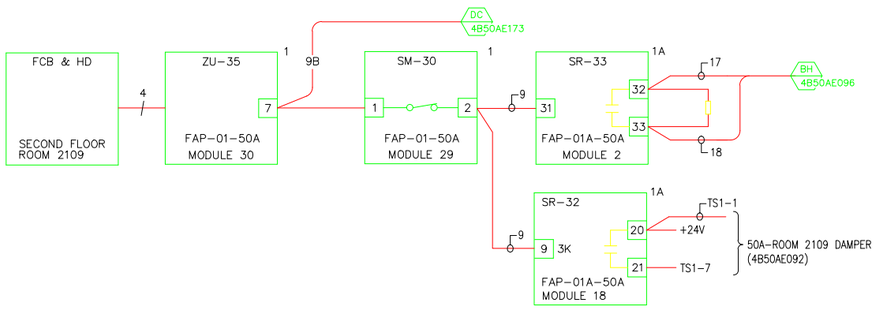

DETAIL 3 – BLDG ZONE 2-201-25

REF 4B50AE045

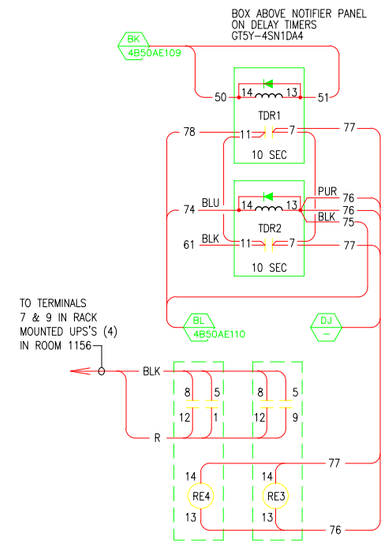

DETAIL 6 – ROOM 1156
TRIP CIRCUITS

REF 4B50AE049

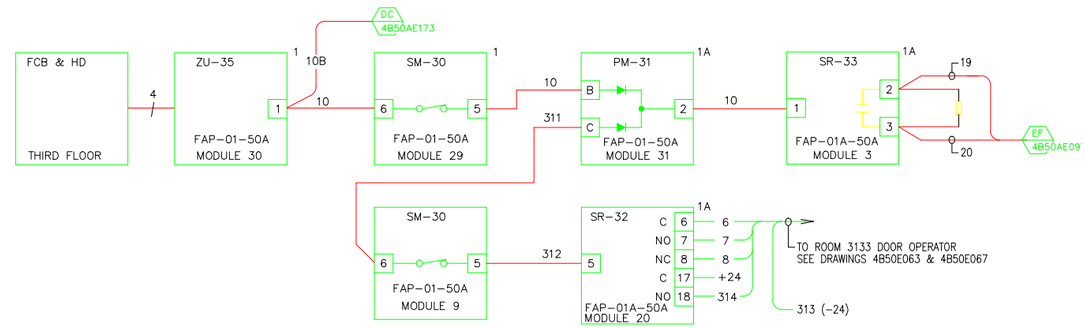

DETAIL 4 – BLDG ZONE 2-201-26

REF 4B50AE045

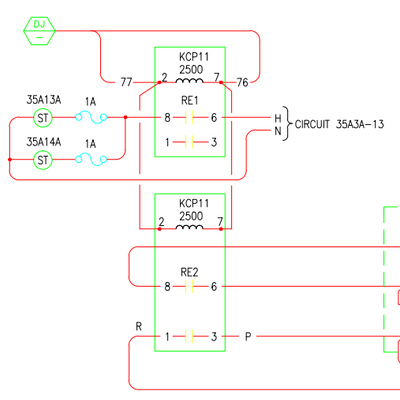

DETAIL 11 – UPS TRIP CIRCUITS

ROOM 50A-155

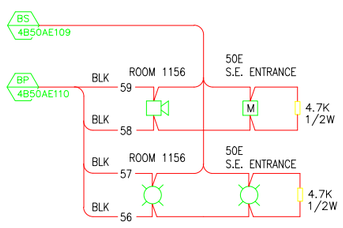

DETAIL 10 – ROOM 1156

REMOTE ALARMS

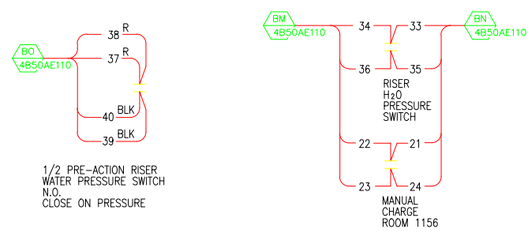

DETAIL 7 – ROOM 1156 NOTIFIER PANEL FIELD WIRING

REF 4B50AE110

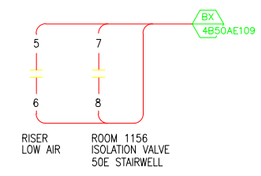

DETAIL 8 – ZONES 2-201-52 & -53

REF 4B50AE108

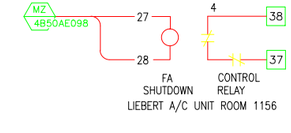

DETAIL 9

REFERENCE DRAWINGS:

4B50AE094	INTERCONNECTION DIAGRAM
4B50AE095	INTERCONNECTION DIAGRAM
4B50AE097	INTERCONNECTION DIAGRAM

LEGEND

PYROTRONICS
MODULE TYPE → SM-30
MODULE LOCATION → MOD 27
CONTROL PANEL → FAP-01A-50A

AS BUILT
REVISION
C
9/30/2008

REVISION NUMBER	DRAWN BY	CHECKED BY	APPR'D BY	DATE	REMARKS
C				9/30/08	AS BUILT
B	AD	LDD	MCD	8/20/07	FIRE ALARM SYSTEM UP-GRADE
A	MRC	AD	MCG	9/23/04	PHASE III FIRE ALARM SYSTEM UP-GRADE

PROFESSIONAL SEAL (IF REVISION APPLIES ONLY TO REVISED WORK)
ISSUE (PROGRESS, ESTIMATE, BID, CONSTRUCTION, CONFORMED, REVISION, RECORD)

50A
FIRE ALARM SYSTEM
LOGIC DIAGRAM DETAILS

UNIVERSITY OF CALIFORNIA
LAWRENCE BERKELEY NATIONAL LABORATORY
FACILITIES DIVISION

DRAWN BY	AD	DATE 6/21/200
CHECKED BY	ROB	6/30/200
APPROVED BY	MCG	6/30/200
CAD FILE PATH	00022520	
SCALE	As Noted	
DRAWING NO.	4B50AE165C	SHEET
PROJECT NO.	FB4010	1 OF 1