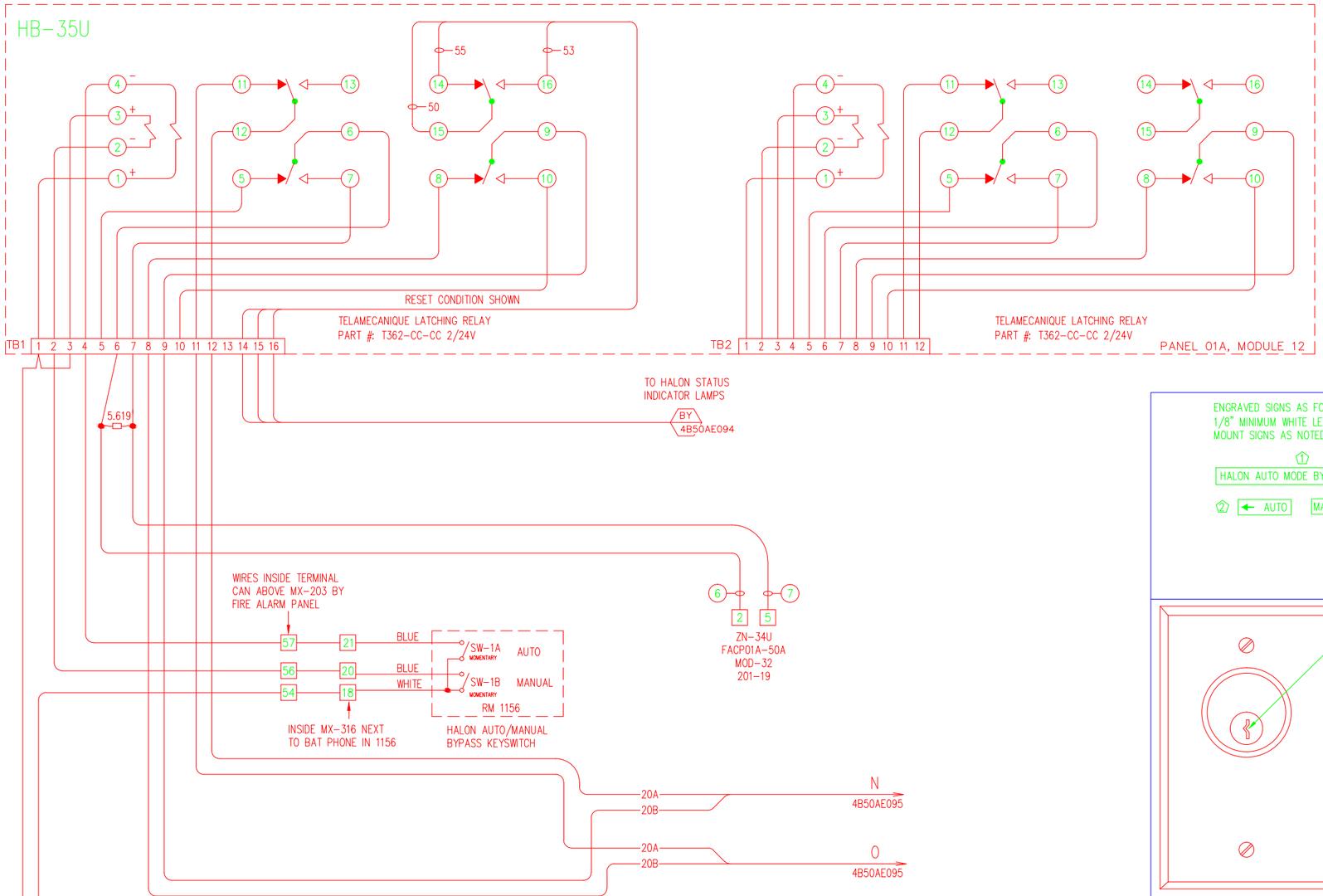

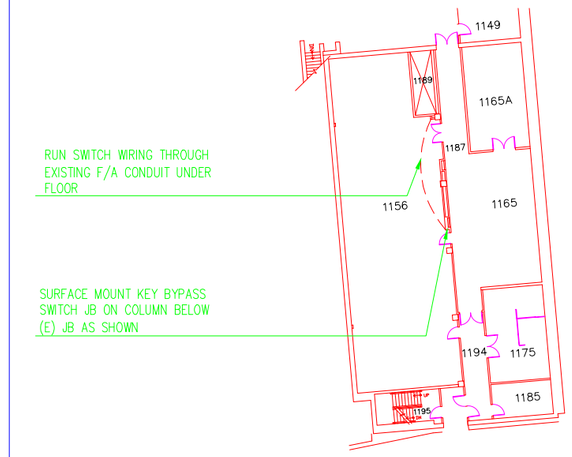

ENGRAVED SIGNS AS FOLLOWS:
1/8" MINIMUM WHITE LETTERS ON RED BACKGROUND.
MOUNT SIGNS AS NOTED. SIZE SIGNS TO FIT

1 HALON AUTO MODE BYPASS SWITCH

2 ← AUTO MANUAL → 3

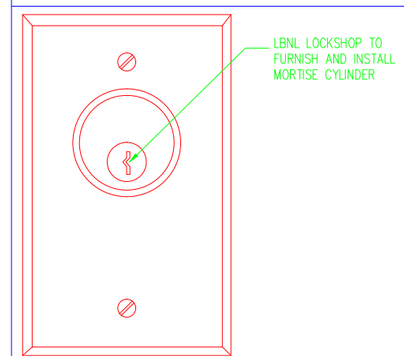

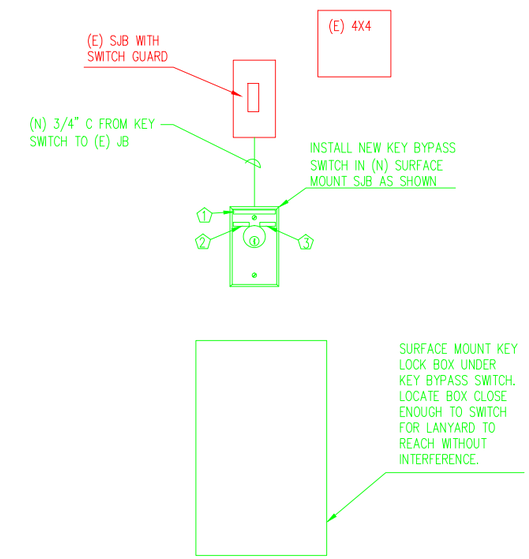

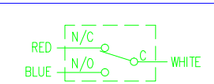

SWITCH 1A WIRING COLOR CODE

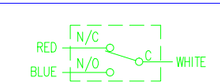

SWITCH 1B WIRING COLOR CODE

REFERENCE DWGS:

4B50AE045 LOGIC DIAGRAM
4B50AE049 1156 SYSTEM LOGIC DIAGRAM
4B50AE095 WIRING DIAGRAM
4B50AE097 TR208 DIAGRAM

REFERENCE DRAWINGS:

THIS DRAWING → 4B50AE064 HALON REMOTE WIRING DIAGRAM
4B50AE109 TR 242 WIRING DIAGRAM
4B50AE112 FACP #1 WIRING DIAGRAM #1
4B50AE082 FIELD DEVICES CONNECTION DIAGRAM
4B50AE113 FIELD DEVICES CONNECTION DIAGRAM
4B50AE092 FIRE ALARM SYSTEM PLAN
4B50AE094 TR 209 INTERCONNECTION DIAGRAM
4B50AE095 SYSTEM 3 PANEL FAP-01-50A WIRING DIAGRAM
4B50AE096 SR-33 FACP-01A-50A INTERCONNECTION DIAGRAM
4B50AE097 MX-203 TR 207 & 208 INTERCONNECTION DIAGRAM
4B50AE098 SYSTEM 3 PANEL FAP-01A-50A
4B50AE110 ROOM 1156 VESTA & NOTIFIER INTERCONNECTION DIAGRAM
4B50AE165 LOGIC DIAGRAM DETAILS
4B50AE044 TR 207 LOGIC DIAGRAM
4B50AE045 TR 208 LOGIC DIAGRAM
4B50AE046 TR 209 LOGIC DIAGRAM
4B50AE108 TR 242 LOGIC DIAGRAM
4B50BE049 TR 210 LOGIC DIAGRAM
4B50AE049 ROOM 1156 FIRE ALARM SYSTEM LOGIC

REVISION NUMBER	DRAWN BY	CHECKED BY	APPR'D BY	DATE	REMARKS
G				9/30/08	AS BUILT
F	JWD		MCG	5/08	AS BUILT 50A UPGRADE
E	GMS	MCG	MCG	5-7-03	REMOVED KEY BYPASS LED'S & AS BUILT
D	GMS	MCG	MCG	4/3/03	ADD MANUAL/AUTO KEY BYPASS SWITCH
C	AD	ROB	MCG	6/30/00	AS BUILT
B	LM	ROB	MCG	7/16/98	AUTOCAD CONVERSION
A	RG		BMY	8/31/90	AS BUILT

50A RM 1156 FIRE ALARM SYSTEM HALON REMOTE AUTO/MANUAL WIRING DIAGRAM

UNIVERSITY OF CALIFORNIA LAWRENCE BERKELEY LABORATORY
FACILITIES DEPARTMENT

DRAWN BY	R.GRAZIER	DATE 7-25-9(
CHECKED BY	_	_
APPROVED BY	BMY	7-27-9(
CAD FILE PATH		
SCALE	AS NOTED	
DRAWING NO.	4B50AE064G	SHEET FA
PROJECT NO.	FA8040	1 OF 1