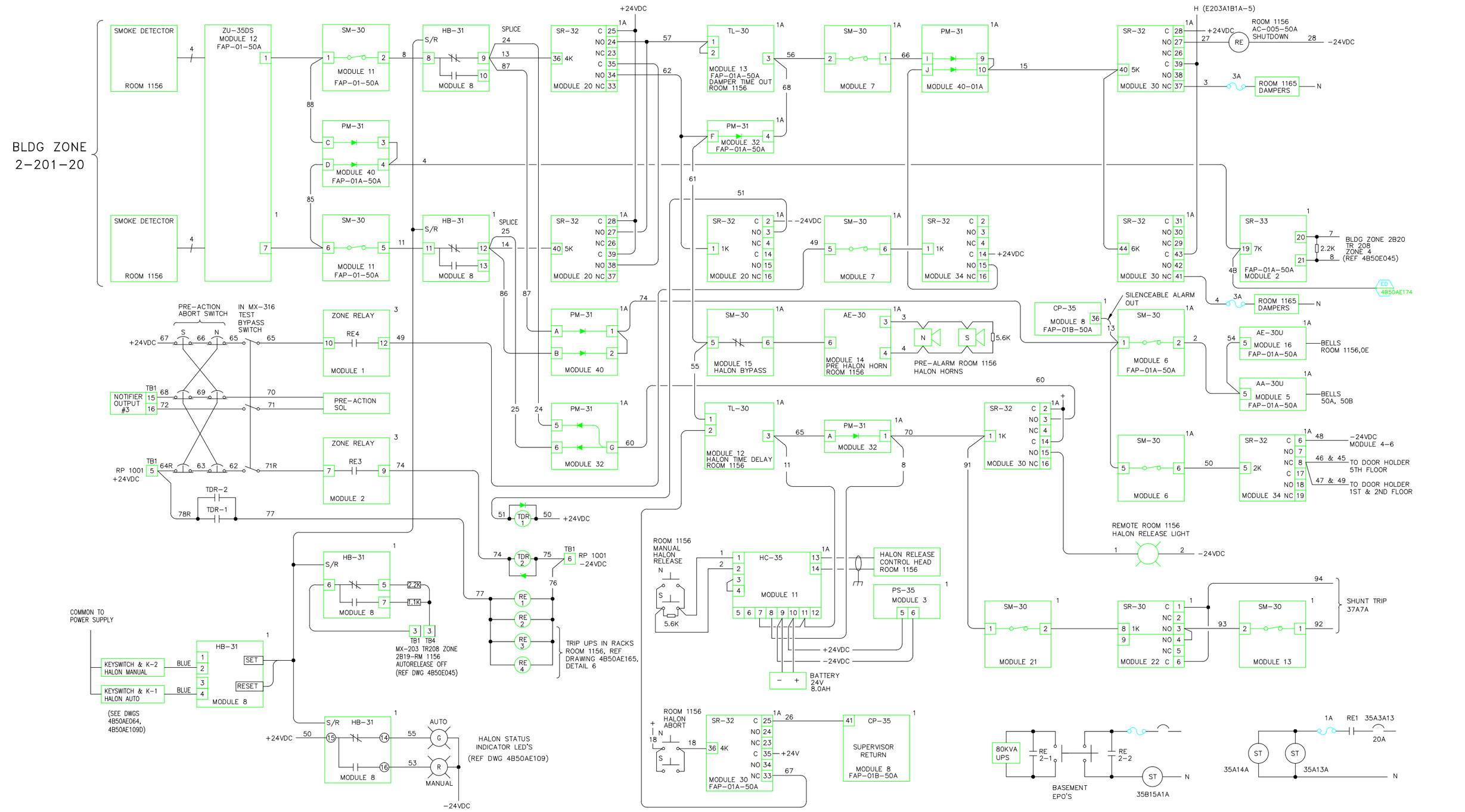

REVISION NUMBER	DRAWN BY	CHECKED BY	APPR'D BY	DATE	REMARKS
K				9/30/08	AS BUILT
J	AD	LDD	MCD	8/20/07	FIRE ALARM SYSTEM UP-GRADE
I	MRC	AD	MCG	9/23/04	PHASE III FIRE ALARM SYSTEM UP-GRADE
H	GMS	MCG	MCG	5-7-03	AS BUILT
G	GMS	MCG	MCG	4/3/03	ADD HB-31 KEYSWITCH BYPASS & LED'S
F	AD	ROB	MG	8/15/00	REDRAWN-REPLACED REV "E"
E	VA		MG	5/3/99	PER jo#w35129 and ACCT3 FD9051

PROFESSIONAL SEAL (IF REVISION, APPLIES ONLY TO REVISED WORK)

ISSUE (PROGRESS, ESTIMATE, BID, CONSTRUCTION, CONFORMED, REVISION, RECORD)

AS BUILT REVISION K 9/30/2008

50A FIRE ALARM SYSTEM
ROOM 1156 FIRE ALARM SYSTEM LOGIC

UNIVERSITY OF CALIFORNIA
LAWRENCE BERKELEY NATIONAL LABORATORY
FACILITIES DIVISION

DRAWN BY RG
DATE 3/1/1984
CHECKED BY
APPROVED BY
CAD FILE PATH 00022522
SCALE As Noted
DRAWING NO. 4B50AE049K
SHEET 1 OF 1
PROJECT NO. FB4010