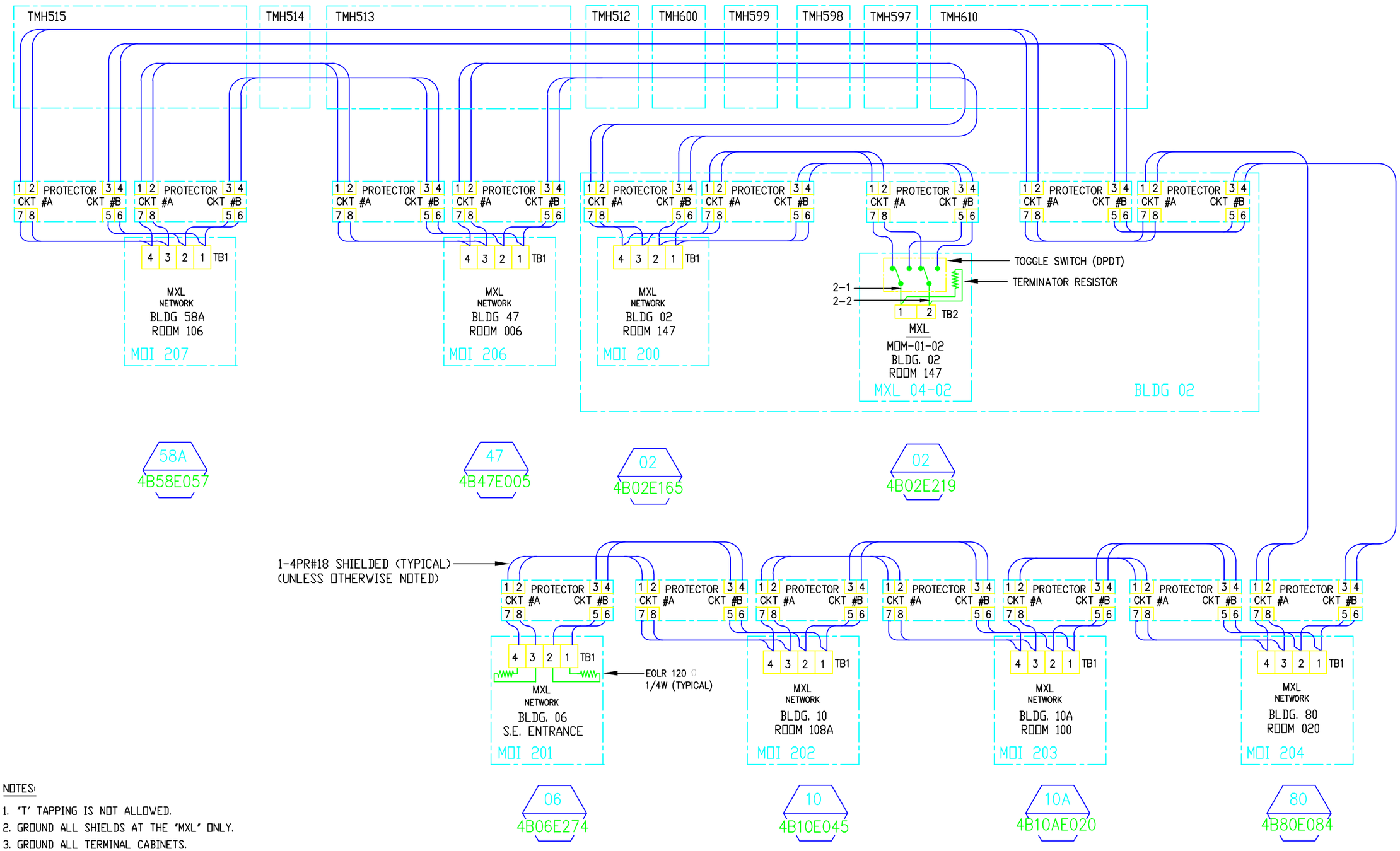

NOTES:

1. 'T' TAPPING IS NOT ALLOWED.
2. GROUND ALL SHIELDS AT THE 'MXL' ONLY.
3. GROUND ALL TERMINAL CABINETS.
4. GROUND ALL TERMINAL CABINETS AND DIN RAILS FOR PROTECTORS.
5. SHORT ALL UNUSED PAIRS AT EACH TERMINAL CABINET.

PROFESSIONAL SEAL (IF REVISION, APPLIES ONLY TO REVISED WORK)	TITLE 2 CONSTRUCTION 3/15/2006	ISSUE (PROGRESS, ESTIMATE, BID, CONSTRUCTION, CONFORMED, REVISION, RECORD)	REVISION NUMBER	DRAWN BY	CHECKED BY	APPR'D BY	DATE	REMARKS	

48 COPPER LOOP

MXL/MOI COPPER LOOP NO. 4

NETWORK BLOCK DIAGRAM

UNIVERSITY OF CALIFORNIA
LAWRENCE BERKELEY NATIONAL LABORATORY
FACILITIES DIVISION

DRAWN BY	AD	DATE 1/3/2006
CHECKED BY	AD	1/3/2006
APPROVED BY	LDD	1/3/2006
CAD FILE PATH	00021074	
SCALE	Full	
DRAWING NO.	4B48E068	SHEET 1 OF 1
PROJECT NO.	FR1015	