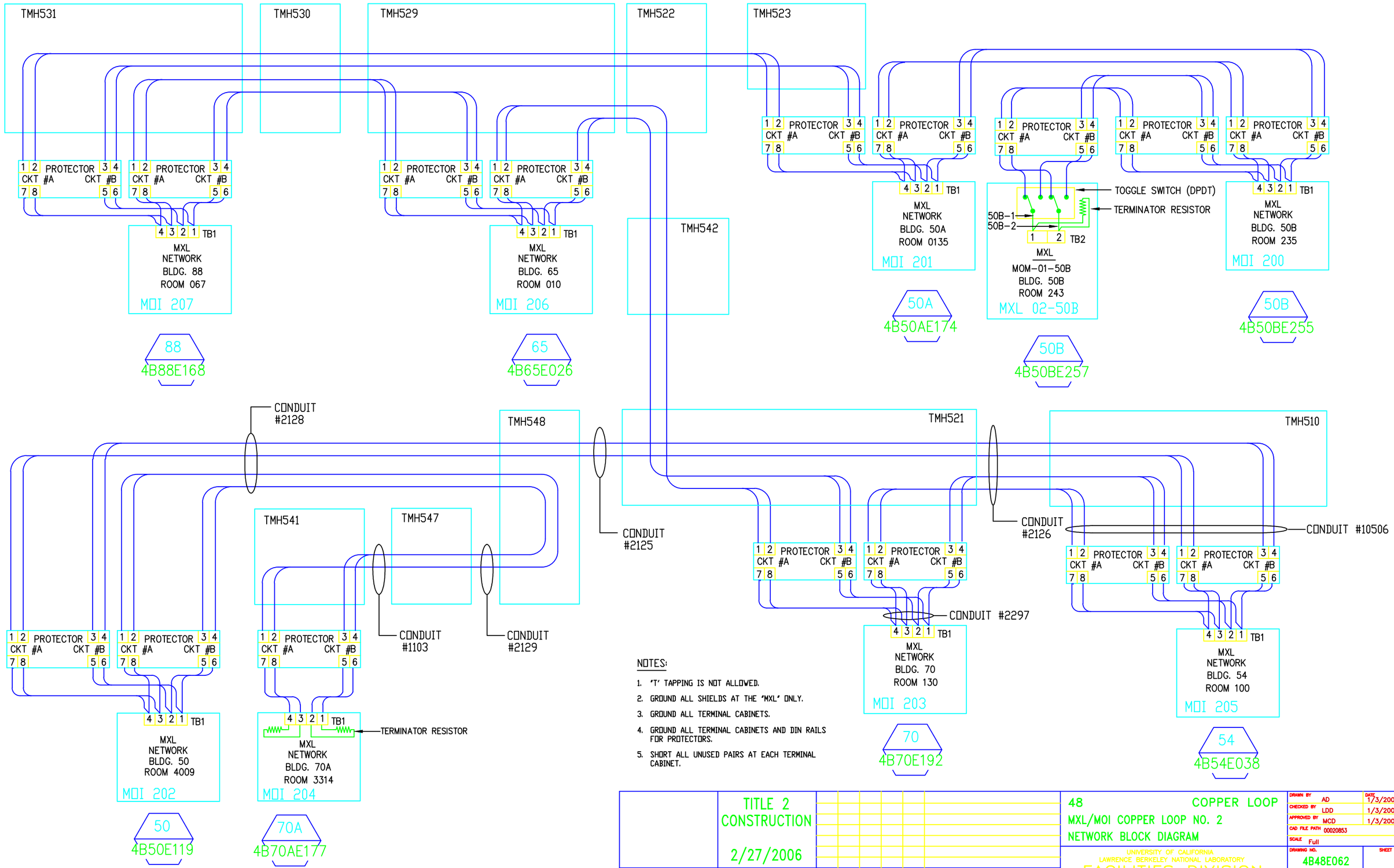

NOTES:

1. 'T' TAPPING IS NOT ALLOWED.
2. GROUND ALL SHIELDS AT THE 'MXL' ONLY.
3. GROUND ALL TERMINAL CABINETS.
4. GROUND ALL TERMINAL CABINETS AND DIN RAILS FOR PROTECTORS.
5. SHORT ALL UNUSED PAIRS AT EACH TERMINAL CABINET.

TITLE 2
CONSTRUCTION

2/27/2006

48 COPPER LOOP
MXL/MOI COPPER LOOP NO. 2
NETWORK BLOCK DIAGRAM

UNIVERSITY OF CALIFORNIA
LAWRENCE BERKELEY NATIONAL LABORATORY
FACILITIES DIVISION

DRAWN BY	AD	1/3/2006
CHECKED BY	LDD	1/3/2006
APPROVED BY	MCD	1/3/2006
CAD FILE PATH	00020853	
SCALE	Full	
DRAWING NO.	4B48E062	
SHEET	1 OF 1	
PROJECT NO.	FR1015	

PROFESSIONAL SEAL (IF REVISION, APPLIES ONLY TO REVISED WORK)

ISSUE (PROGRESS, ESTIMATE, BID, CONSTRUCTION, CONFORMED, REVISION, RECORD)	REVISION NUMBER	DRAWN BY	CHECKED BY	APPR'D BY	DATE	REMARKS