REV	LOC	RN	CHANGE	BY	APP. BY	APP. DT
A			ORIGINAL RELEASE			

REAR PANEL CONNECTIONS

CONFIGURATORS AVAILABLE FOR:	
1. RS-422/485	* P/N 400405-0002
2. ISOLATED RS-422/485	P/N 400405-0001
3. I/LOOP	P/N 400406-0000
4. RS-232	* P/N 400407-0001
5. FIBER OPTIC	P/N 400506-0001
6. RACK DRIVER, 32 LINE	P/N 400424-0000
7. HI-LEVEL RX ISOLATED +-12V	P/N 400426-0001
8. HI LEVEL FULL ISOLATED +-24V	ASY. 10001-0082
9. SIX LINE I/LOOP	P/N 400448-0001
10. FSK RADIO MUX	P/N 400455-0001
11. AUDIO MODEM	P/N 400475-0001

NOTE: TO GO BEYOND 4 SERIAL PORTS
USE QUAD SERIAL PORT EXPANDER
WHICH PROVIDES 4 RS-232 SERIAL PORTS
(2 FULL PORTS & 2 HALF PORTS)
THIS BOARD PLUGS INTO ANY EMPTY SLOT IN CARD CAGE
QUAD SERIAL PORT EXPANDER P/N 400476-0001

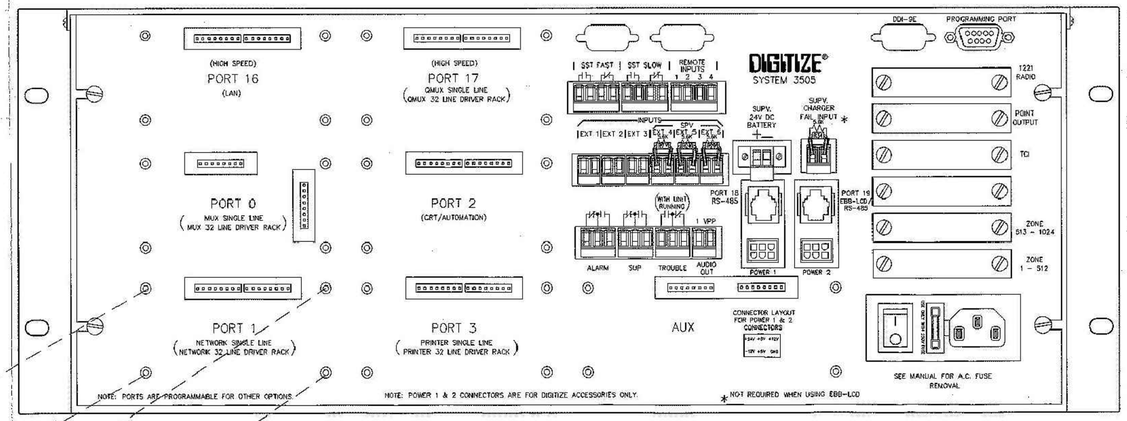

NOTE:

1. CONFIGURATOR CARDS PRECEEDED BY AN ASTERIX CONTAIN BUILT-IN LIGHTNING PROTECTION, WHICH INCLUDES: GAS TUBE, IMPEDANCE DEVICE, TRANSORB.
2. MUST BE CONNECTED TO A STANDARD PWR. SUPPLY UL LISTED FOR FIRE PROTECTIVE SIGNALING USE.
3. USE ONLY UL LISTED SIGNAL SYSTEM CONTROL UNIT ENCLOSURE FOR ALL DIGITIZE EQUIPMENT

TYPICAL CONFIGURATOR ASSY.

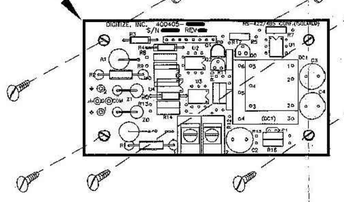

STANDOFF SCREW
PN 900577
LENGTH=1/3"
TYPICAL

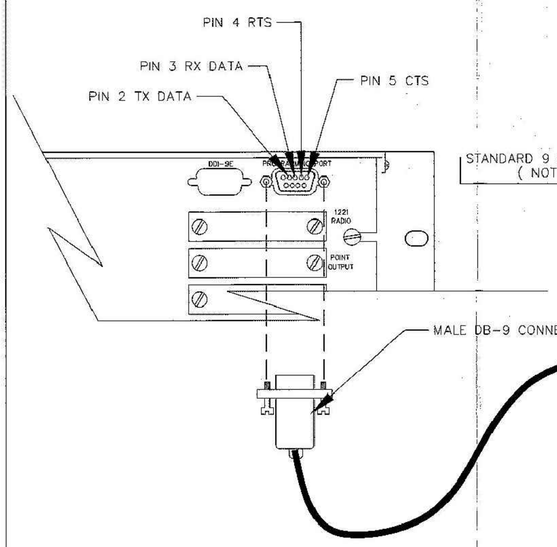

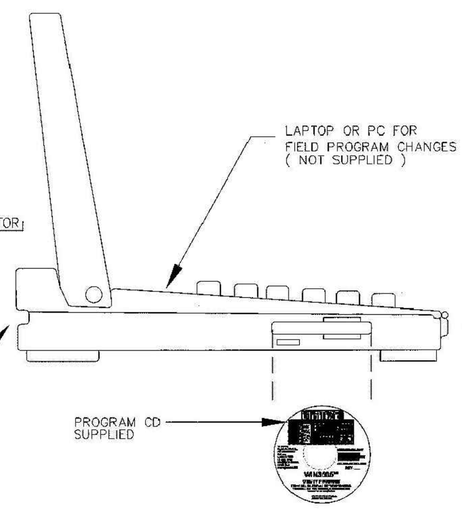

SST CONTRACTS: For supplementary use only. Not intended for fire alarm use.
MAX VOLTAGE: 120 VAC
MAX CURRENT: 3 AMPERES
SOLID STATE TRANSMITTER
DRY CONTACT
NOT SUPERVISED

100mA 24V LOOPS NOT SUPERVISED

GND CHASSIS N/O OR N/C CONTACTS NOT SUPERVISED

NOT USED

MUST BE CONNECTED TO 60 HOURS OF UNINTERUPTED POWER SUPPLY. (REMOTE STATION NEEDS 60 HOURS)

REMOVE RESISTOR WITH INSTALLATION OF CUSTOMER SUPPLIED BATTERY CHARGER.

UL LISTED 5.6K RESISTOR ACROSS CONTACTS OF CUSTOMER SUPPLIED UNIT

TIME OPTION DISABLE DRY CONTACT

ZONE TO CODE DISABLE DRY CONTACT

MAX VOLTAGE: 5V
MAX CURRENT: 1mA
LOCATED IN SAME ROOM AS SYSTEM 3505

BATTERY CHARGER
UL LISTED FOR FIRE PROTECTIVE SIGNALING USE

SYSTEM 3505 REQUIRES 24VDC @ 1 AMP FOR BATTERY OPERATION

SEE SHEET NO.6 FOR DIGITIZE BATTERY CHARGER

1V P.P "LINE LEVEL"
FOR PA SYSTEM ETC.
NOT SUPERVISED
LOCATED IN THE SAME ROOM AS SYSTEM 3505

CONTROLLED
JUL 8 2003
COPY

USED ON NEXT ASS'Y	DRN 1/28/02	UNLESS OTHERWISE SPECIFIED .000±.005 .00=.015 ANG TOL=1/2°	DIGITIZE®
	CHK		INSTALLATION DWG: SYSTEM 3505 REAR PANEL CONNECTIONS
	ENG		
	APP		
	MATERIAL	SCALE	SIZE D 800321 REV A

DIGITIZE DRAWINGS FOR REFERENCE ONLY.

TITLE 2 CONSTRUCTION 3/29/2005	48 DIGITIZE FIRE ALARM SYST SYSTEM 3505 REAR PANEL CONNECTIONS	DRAWN BY AD	DATE 2/15/2005
		CHECKED BY MCG	3/4/2005
		APPROVED BY MCG	3/4/2005
		CAD FILE PATH 00019056	
		SCALE As Noted	
	UNIVERSITY OF CALIFORNIA LAWRENCE BERKELEY NATIONAL LABORATORY FACILITIES DIVISION	DRAWING NO. 4B48E043_	SHEET 2 OF 7
		PROJECT NO. FE5011	

PROFESSIONAL SEAL (IF REVISION, APPLIES ONLY TO REVISED WORK) | ISSUE (PROGRESS, ESTIMATE, BID, CONSTRUCTION, CONFORMED, REVISION, RECORD) | REVISION NUMBER | DRAWN BY | CHECKED BY | APPR'D BY | DATE | REMARKS