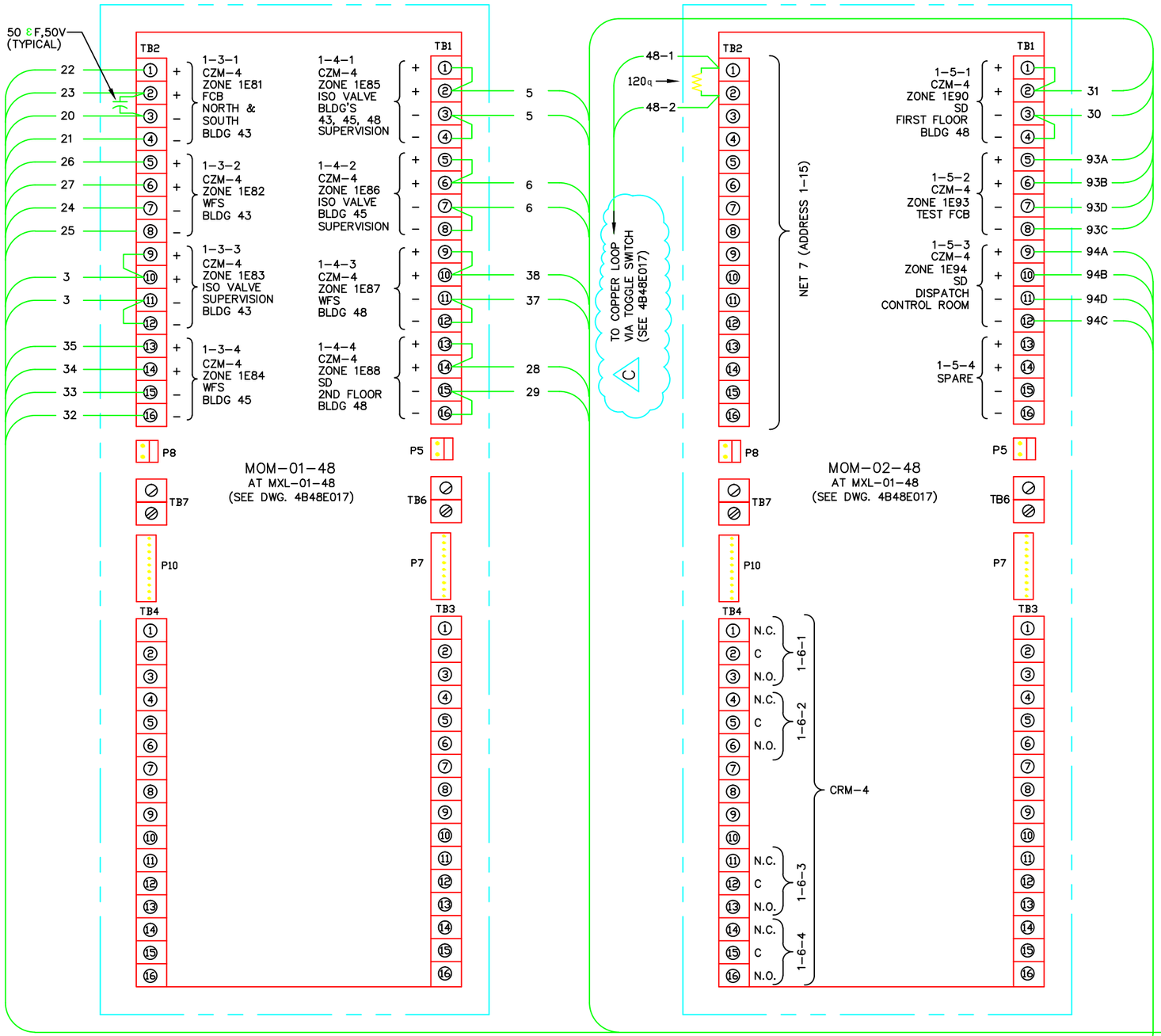

OLD ADDRESS	DESCRIPTION	MOM-01-48 TERMINATION	MODULE TYPE & NO.	MXL-01-48 ADDRESS
1E81	FCB, BLDG 43, NORTH AND SOUTH	TB2-1,2,3,4	CZM-4	1-3-1
1E82	WFS, BLDG 43 SPRINKLERS	TB2-5,6,7,8	CZM-4	1-3-2
1E83	SUPERVISION, BLDG 43 ISOLATION VALVE	TB2-10,11	CZM-4	1-3-3
1E84	WFS, B. 45 S.E. CORNER SPRINKLERS	TB2-12,13,14,15	CZM-4	1-3-4
1E85	SUP RISER VALVE, BLDG'S 43,45,48	TB1-2,3	CZM-4	1-4-1
1E86	SUPERVISION, BLDG 48 ISOLATION VALVE	TB1-6,7	CZM-4	1-4-2
1E87	WFS, SPRINKLERS	TB1-10,11	CZM-4	1-4-3
1E88	SD, 2ND FLOOR, BLDG 48	TB1-14,15	CZM-4	1-4-4
1E89	NOT USED	N/A	N/A	N/A

C

OLD ADDRESS	DESCRIPTION	MOM-02-48 TERMINATION	MODULE TYPE & NO.	MXL-01-48 ADDRESS
1E90	SD, 1ST FLOOR, BLDG 48	TB2-2,3	CZM-4	1-5-1
1E91	NOT USED	N/A	N/A	N/A
1E92	NOT USED	N/A	N/A	N/A
1E93	TEST, FCB IN DISPATCH ROOM	TB2-5,6,7,8	CZM-4	1-5-2
1E94	SD, DISPATCH CONTROL ROOM	TB2-9,10,11,12	CZM-4	1-5-3
1E95	NOT USED	N/A	N/A	N/A
1E96	NOT USED	N/A	N/A	N/A

C

ASBUILT REVISION C 8/22/2006

REVISION NUMBER	DRAWN BY	CHECKED BY	APPR'D BY	DATE	REMARKS
C	AD	LDD	MCD	08/20/06	AS-BUILT RECORD DRAWING
B	AD	LDD	MCD	08/04/06	REVISED FOR MXL COPPER LOOP
A	AD	MCG	MCG	10/14/05	REVISED FOR MXL INSTALLATION

PROFESSIONAL SEAL (IF REVISION, APPLIES ONLY TO REVISED WORK)

ISSUE (PROGRESS, ESTIMATE, BID, CONSTRUCTION, CONFORMED, REVISION, RECORD)

48 FIRE ALARM SYSTEM
MOM-1-48 AND MOM-2-48
WIRING DIAGRAM

UNIVERSITY OF CALIFORNIA
LAWRENCE BERKELEY NATIONAL LABORATORY
FACILITIES DIVISION

		DATE
DRAWN BY	AD	7/26/2004
CHECKED BY	LDD	7/26/2004
APPROVED BY	MCD	7/26/2004
CAD FILE PATH	00021439	
SCALE	As Noted	
DRAWING NO.	4B48E018C	
SHEET	FA	
PROJECT NO.	FB4010	1 OF 1