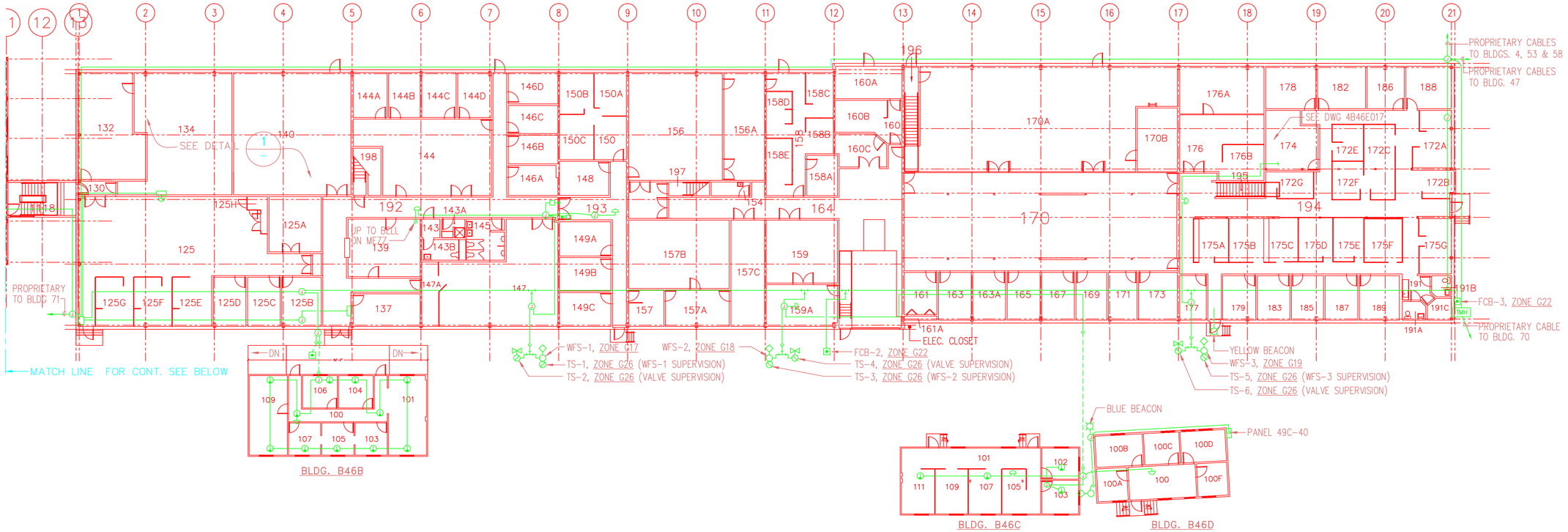

BUILDING 46—PLAN

SCALE: 1/16"=1'-0"

SYMBOLS:

- FIRE CALL BOX
- HEAT DETECTOR
- SMOKE DETECTOR
- WATER FLOW SWITCH
- WFS SUPERVISION TAMPER SWITCH
- VALVE SUPERVISION TAMPER SWITCH
- JUNCTION BOX
- PULL BOX
- CONDUIT EXPOSED OR ACCESSIBLE
- CONDUIT BURIED OR ENCASED IN CONC.
- CONDUIT UP
- CONDUIT DOWN
- FLEXIBLE CONDUIT
- TEE

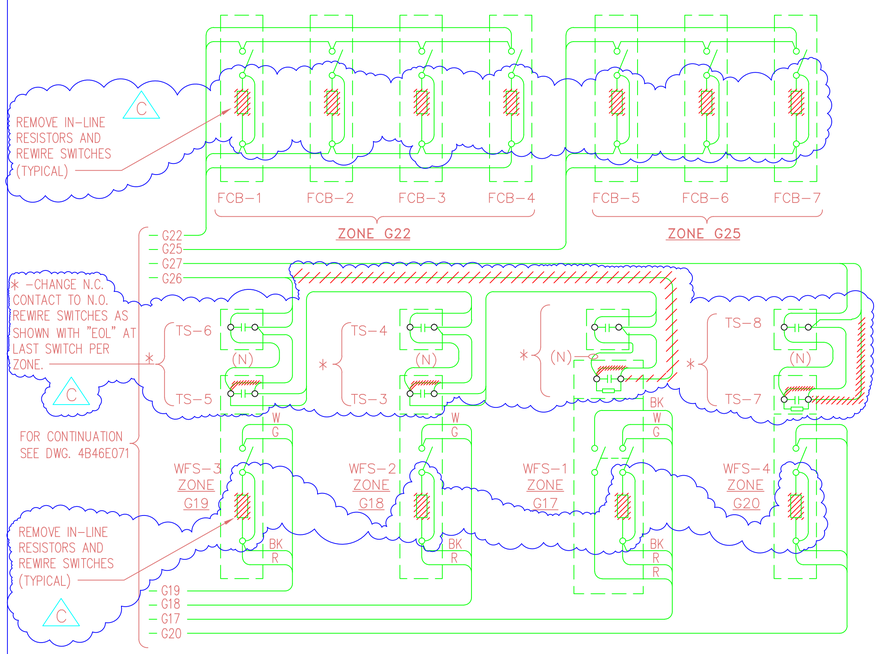

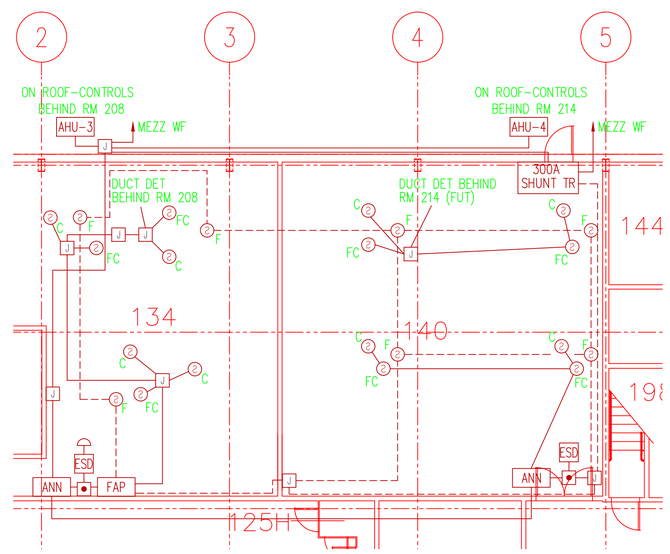

BUILDING 46 COMPUTER RMS 134 & 140

1 / –

SCALE: 1/8"=1'-0"

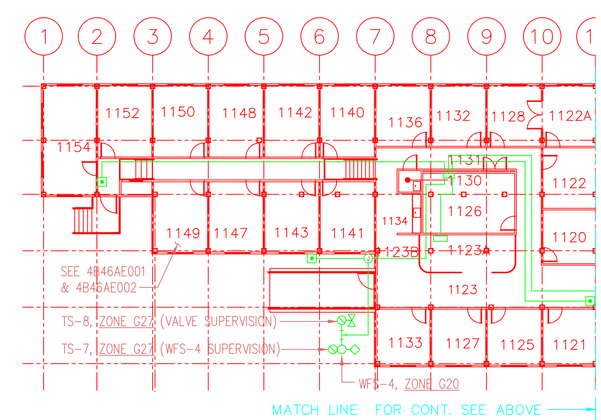

BUILDING 46A—PLAN

SCALE: 1/16"=1'-0"

16' 8' 0 16' 32'
SCALE: 1/16" = 1'-0"

8' 4' 0 8' 16'
SCALE: 1/8" = 1'-0"

DISTRIBUTION LIST:

2 – ELECTRIC SHOP B76 (FILE I & II)
1 – B90J (FILE III)
1 – STICK FILE
ORIGINAL – FLAT FILE B90F

REVISION NUMBER	DRAWN BY	CHECKED BY	APPR'D BY	DATE	REMARKS
C	AD	MCG	MCG	5/08/05	CHANGED SWITCH CONTACTS TO N.O. WITH EOL
B	LM	ROB	MCG	8/24/98	AUTOCAD CONVERSION
A	LSR	RG		11/85	AS BUILT

46, 46A, 46B, 46C & 46D
FIRE ALARM SYSTEM
PLAN

UNIVERSITY OF CALIFORNIA LAWRENCE BERKELEY LABORATORY
FACILITIES DEPARTMENT

		DATE
DRAWN BY	HW	1/30/84
CHECKED BY	RG	3/14/84
APPROVED BY	BHS	1/84
CAD FILE PATH	00007158	
SCALE	AS SHOWN	
DRAWING NO.	4B46E023C	SHEET —
PROJECT NO.	fa8040	1 OF 1