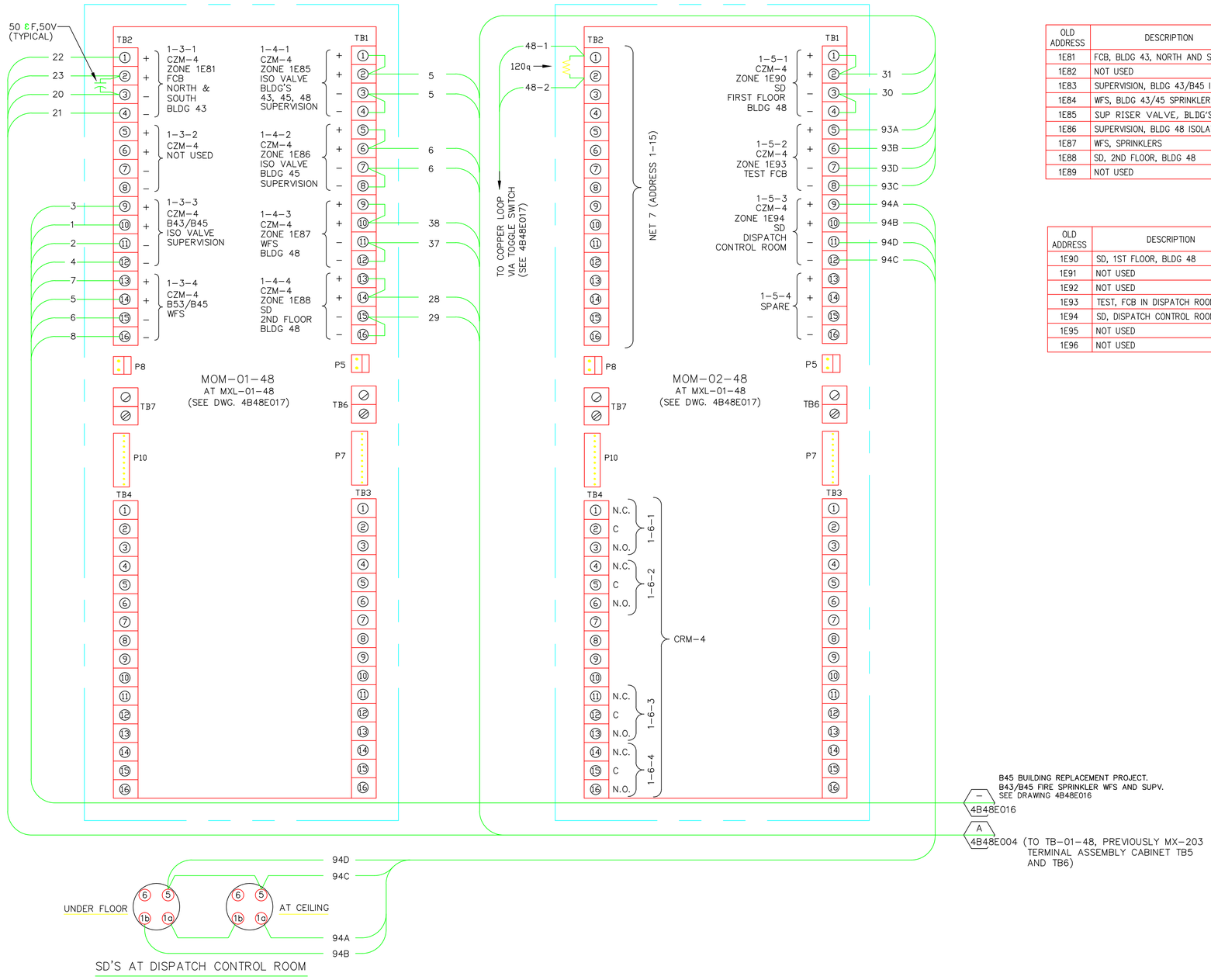

OLD ADDRESS	DESCRIPTION	MOM-01-48 TERMINATION	MODULE TYPE & NO.	MXL-01-48 ADDRESS
1E81	FCB, BLDG 43, NORTH AND SOUTH	TB2-1,2,3,4	CZM-4	1-3-1
1E82	NOT USED	TB2-5,6,7,8	CZM-4	N/A
1E83	SUPERVISION, BLDG 43/B45 ISO VALVE	TB2-9,10,11,12	CZM-4	1-3-3
1E84	WFS, BLDG 43/45 SPRINKLERS	TB2-12,13,14,15	CZM-4	1-3-4
1E85	SUP RISER VALVE, BLDG'S 43,45,48	TB1-2,3	CZM-4	1-4-1
1E86	SUPERVISION, BLDG 48 ISOLATION VALVE	TB1-6,7	CZM-4	1-4-2
1E87	WFS, SPRINKLERS	TB1-10,11	CZM-4	1-4-3
1E88	SD, 2ND FLOOR, BLDG 48	TB1-14,15	CZM-4	1-4-4
1E89	NOT USED	N/A	N/A	N/A

OLD ADDRESS	DESCRIPTION	MOM-02-48 TERMINATION	MODULE TYPE & NO.	MXL-01-48 ADDRESS
1E90	SD, 1ST FLOOR, BLDG 48	TB2-2,3	CZM-4	1-5-1
1E91	NOT USED	N/A	N/A	N/A
1E92	NOT USED	N/A	N/A	N/A
1E93	TEST, FCB IN DISPATCH ROOM	TB2-5,6,7,8	CZM-4	1-5-2
1E94	SD, DISPATCH CONTROL ROOM	TB2-9,10,11,12	CZM-4	1-5-3
1E95	NOT USED	N/A	N/A	N/A
1E96	NOT USED	N/A	N/A	N/A

NOTE:
THIS DRAWING IS A REPRODUCTION OF LBNL DRAWING 4B48E018 WHICH SHOWS THE EXISTING FIRE ALARM CONTROL UNIT, WITH THE MODIFICATIONS REQUIRED FOR THIS PROJECT SHOWN.

HYT Corporation
Fire Protection Engineers and Consultants
3498 Clayton Road - Suite 101
Concord, California 94519
Phone: (925) 681-2731
FAX: (925) 681-2733
CONSULTING FIRM

CONSULTING FIRM

RPR
1629 Telegraph Avenue
Suite 200
Oakland, CA 94612
Tel 510 272 0654
Fax 510 444 0279
CONSULTING A/E FIRM

REGISTERED PROFESSIONAL ENGINEER ROBERT B. TRAMPLER No. 1165 Exp. 9/30/12 FIRE PROTECTION STATE OF CALIFORNIA
PROFESSIONAL SEAL (IF REVISION, APPLIES ONLY TO REVISED WORK)

RECORD DRAWING - AS BUILT

REVISION NUMBER	DRAWN BY	CHECKED BY	APPR'D BY	DATE	REMARKS
A	HYT	HYT		05.22.13	AS-BUILT RECORD DRAWING
2	HYT	HYT		12.02.11	100% CONSTRUCTION DOCUMENTS REVIEW COMMENTS
1	HYT	HYT		11.10.11	100% CONSTRUCTION DOCUMENTS
0	HYT	HYT		09.30.11	75% CONSTRUCTION DOCUMENTS

ISSUE (PROGRESS, ESTIMATE, BID, CONSTRUCTION, CONFORMED, REVISION, AS-BUILT)

B45
FIRE STATION REPLACEMENT

FIRE ALARM - NOTES & DETAILS

UNIVERSITY OF CALIFORNIA
LAWRENCE BERKELEY NATIONAL LABORATORY
FACILITIES DIVISION

DRAWN BY	HYT	DATE 05.22.13
CHECKED BY	HYT	05.22.13
APPROVED BY		
CAD FILE PATH		
SCALE	AS NOTED	
DRAWING NO.	4B45E025A	SHEET FA0.4
PROJECT NO.		37 OF 43