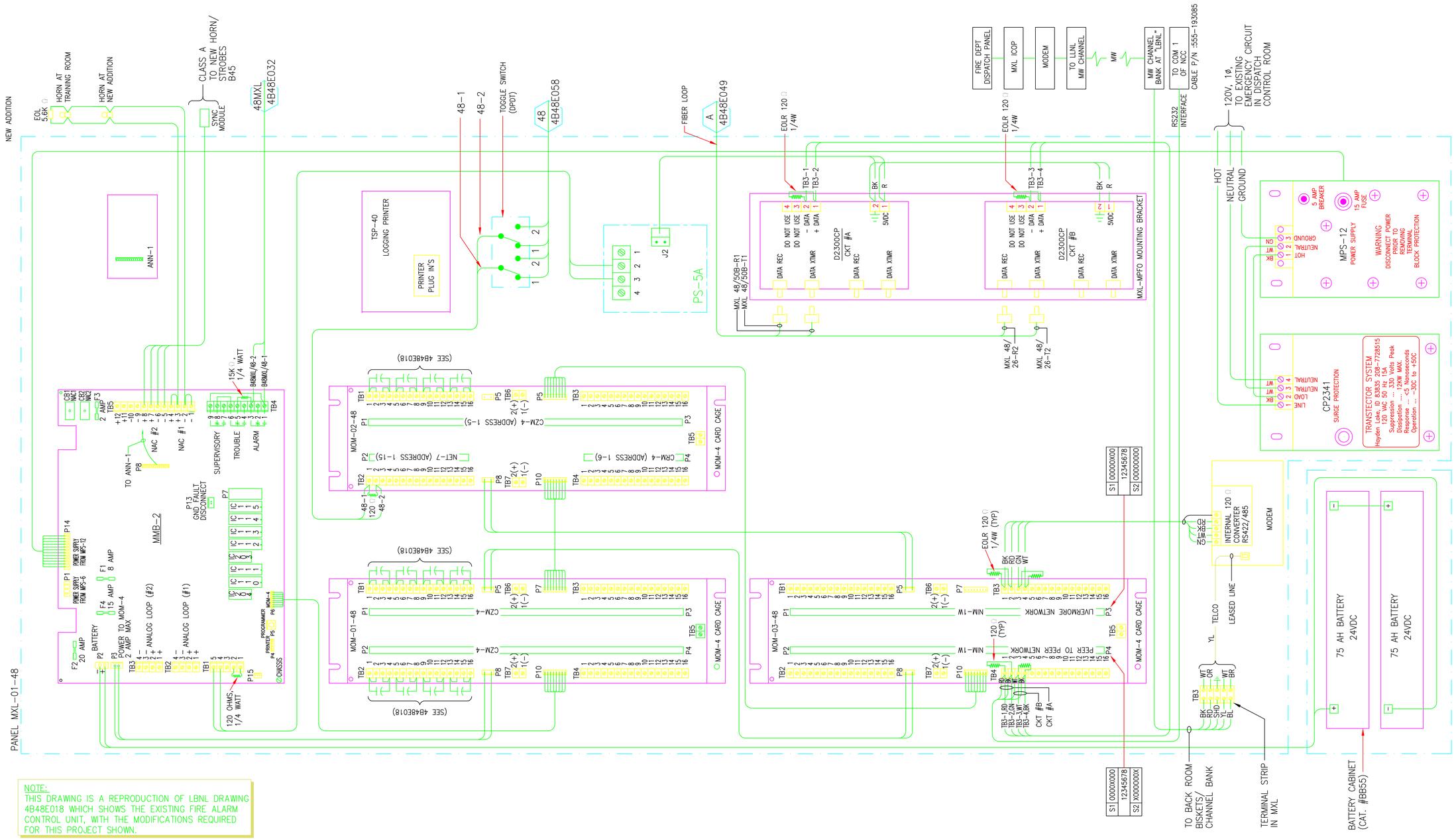

NOTE:
THIS DRAWING IS A REPRODUCTION OF LBNL DRAWING 4B48E018 WHICH SHOWS THE EXISTING FIRE ALARM CONTROL UNIT, WITH THE MODIFICATIONS REQUIRED FOR THIS PROJECT SHOWN.

HYT Corporation
Fire Protection Engineers and Consultants
3498 Clayton Road - Suite 101
Concord, California 94519
Phone: (925) 681-2731
FAX: (925) 681-2733

CONSULTING FIRM

CONSULTING FIRM

RPR
1629 Telegraph Avenue
Suite 200
Oakland, CA 94612
Tel 510 272 0654
Fax 510 444 0279

CONSULTING A/E FIRM

REGISTERED PROFESSIONAL ENGINEER
ALBERT B. TREADER
No. 1165
Exp. 9/30/12
FIRE PROTECTION
STATE OF CALIFORNIA

PROFESSIONAL SEAL (IF REVISION, APPLIES ONLY TO REVISED WORK)

RECORD DRAWING - AS BUILT

ISSUE (PROGRESS, ESTIMATE, BID, CONSTRUCTION, CONFORMED, REVISION, AS-BUILT)

REVISION NUMBER	DRAWN BY	CHECKED BY	APPR'D BY	DATE	REMARKS
A	HYT	HYT		05.22.13	AS-BUILT RECORD DRAWING
2	HYT	HYT		12.02.11	100% CONSTRUCTION DOCUMENTS REVIEW COMMENTS
1	HYT	HYT		11.10.11	100% CONSTRUCTION DOCUMENTS
0	HYT	HYT		09.30.11	75% CONSTRUCTION DOCUMENTS

BUILDING 45
FIRE STATION REPLACEMENT

FIRE ALARM – NOTES & DETAILS

UNIVERSITY OF CALIFORNIA
LAWRENCE BERKELEY NATIONAL LABORATORY
FACILITIES DIVISION

DRAWN BY	HYT	DATE 05.22.13
CHECKED BY	HYT	05.22.13
APPROVED BY		
CAD FILE PATH		
SCALE	AS NOTED	
DRAWING NO.	4B45E024A	SHEET FA0.3
PROJECT NO.		36 OF 43