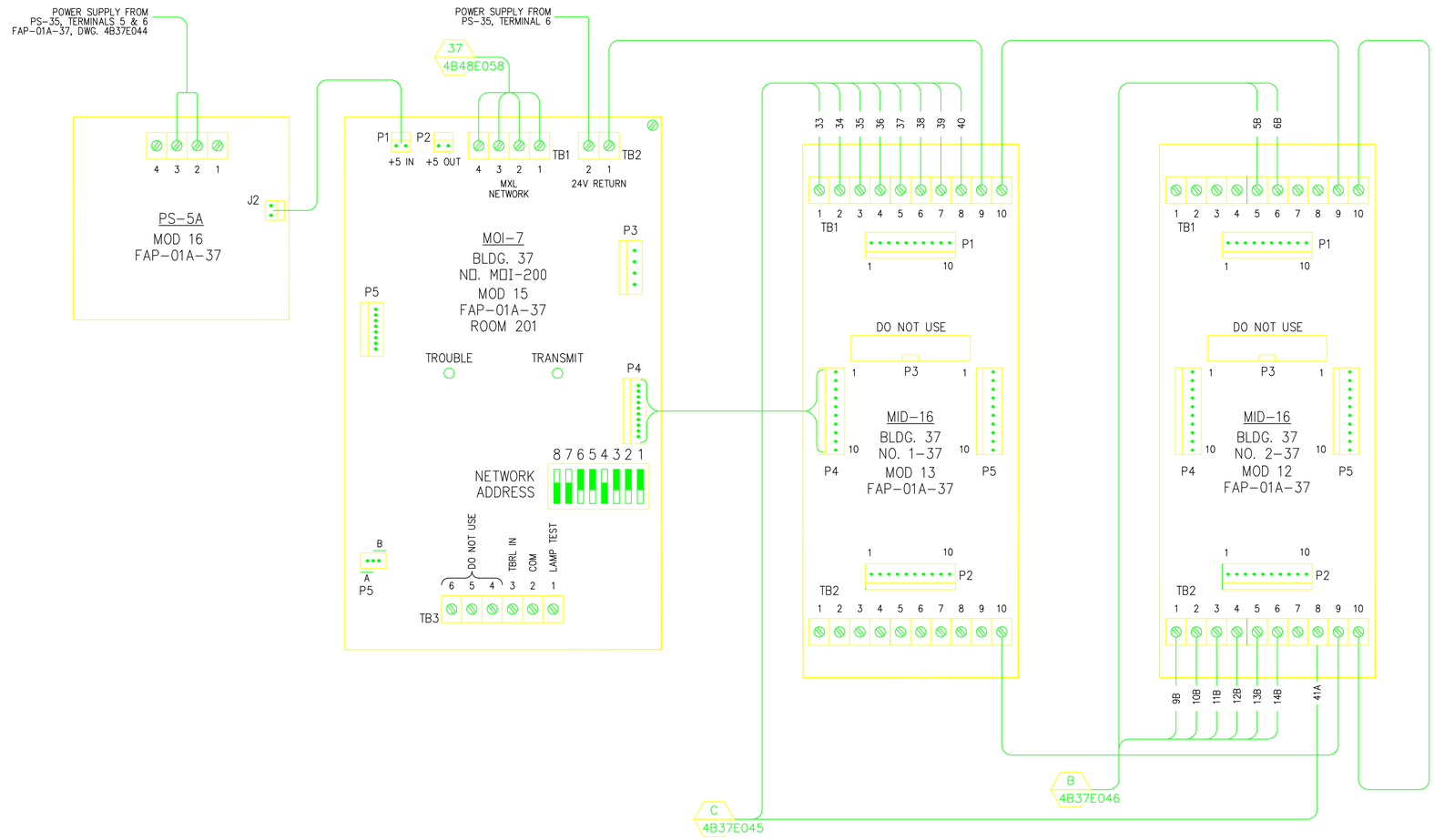

OLD ADDRESS	DESCRIPTION	MID-16 TERMINATION	MODULE TYPE & NO.	MXL NO. 1-48 ADDRESS
2D33	WF DELUGE CT FANS XFRMR	TB. 1 NO. 1	MID-16 NO. 1-37	1-200-1
2D34	BLDG 37 WF 1ST & 2ND FLOORS	TB. 1 NO. 2	MID-16 NO. 1-37	1-200-2
2D35	BLDG 37 FCB (2) 1ST FLR E/W	TB. 1 NO. 3	MID-16 NO. 1-37	1-200-3
2D36	BLDG 37 FCB (2) 2ND FLR E/W	TB. 1 NO. 4	MID-16 NO. 1-37	1-200-4
2D37	BLDG 35 FCB & SD'S	TB. 1 NO. 5	MID-16 NO. 1-37	1-200-5
2D38	BLDG 34 WF 1ST & 2ND FLOORS	TB. 1 NO. 6	MID-16 NO. 1-37	1-200-6
2D39	BLDG 34 FCB 1ST & 2ND FLOORS	TB. 1 NO. 7	MID-16 NO. 1-37	1-200-7
2D40	BLDG 34 SD 1ST & 2ND FLOORS	TB. 1 NO. 8	MID-16 NO. 1-37	1-200-8
2D41	NOT USED	N/A	N/A	N/A
2D42	NOT USED	N/A	N/A	N/A
2D43	NOT USED	N/A	N/A	N/A
2D44	NOT USED	N/A	N/A	N/A
2D45	NOT USED	N/A	N/A	N/A
2D46	NOT USED	N/A	N/A	N/A
2D47	NOT USED	N/A	N/A	N/A

OLD ADDRESS	DESCRIPTION	MID-16 TERMINATION	MODULE TYPE & NO.	MXL NO. 1-48 ADDRESS
2G01	NOT USED	N/A	N/A	N/A
2G02	NOT USED	N/A	N/A	N/A
2G03	NOT USED	N/A	N/A	N/A
2G04	NOT USED	N/A	N/A	N/A
2G05	BLDG 34 RISER VALVES SUPV (2)	TB. 1 NO. 5	MID-16 NO. 2-37	1-200-21
2G06	BLDG 34 ISO VALVE SUPV	TB. 2 NO. 6	MID-16 NO. 2-37	1-200-22
2G07	NOT USED	N/A	N/A	N/A
2G08	NOT USED	N/A	N/A	N/A
2G09	BLDG 37 DELUGE PRES SUPV	TB. 2 NO. 1	MID-16 NO. 2-37	1-200-25
2G10	BLDG 37 T.S. 2.5"	TB. 2 NO. 2	MID-16 NO. 2-37	1-200-26
2G11	BLDG 37 ISO VLV SUPV 2ND FLR	TB. 2 NO. 3	MID-16 NO. 2-37	1-200-27
2G12	BLDG 37 ISO VLV SUPV 1ST FLR	TB. 2 NO. 4	MID-16 NO. 2-37	1-200-28
2G13	BLDG 37 TS RISER VLV 1FL, 2FL	TB. 2 NO. 5	MID-16 NO. 2-37	1-200-29
2G14	BLDG 37 SYSTEM 3 TROUBLE	TB. 2 NO. 6	MID-16 NO. 2-37	1-200-30
2G15	NOT USED	N/A	N/A	N/A
2G16	SMOKE DETECTOR AT "FACP"	TB. 2 NO. 8	MID-16 NO. 2-37	1-200-32

PROFESSIONAL SEAL (IF REVISION, APPLIES ONLY TO REVISED WORK)

AS BUILT

E

4/30/2013

ISSUE (PROGRESS, ESTIMATE, BID, CONSTRUCTION, CONFORMED, REVISION, RECORD)

REVISION NUMBER	DRAWN BY	CHECKED BY	APPR'D BY	DATE	REMARKS
E	LDD	LDD	MCD	4/30/13	AS BUILT PER FIELD VERIFICATIONS
D	AD	LDD	MCD	10/20/06	AS BUILT RECORD DRAWING
C	AD	LDD	MCD	2/26/06	REVISED FOR MXL COPPER LOOP
B	RZT	MCG	MCG	4/04/05	ADDED NEW MID 2-37 & WIRING FOR MXL.
A	AD	AD	MCG	01/29/04	AS-BUILT, PHASE II FA UPGRADE

37 BLDG'S 34, 35, 37

REPLACEMENT FIRE ALARM SYSTEM

MOI/MID MODULE ARRANGEMENT

UNIVERSITY OF CALIFORNIA
LAWRENCE BERKELEY NATIONAL LABORATORY
FACILITIES DIVISION

DRAWN BY HYT	DATE 3/30/2001	
CHECKED BY HYT	3/30/2001	
APPROVED BY		
CAD FILE PATH		
SCALE Full		
DRAWING NO. 4B37E047E	SHEET 1 OF 1	
PROJECT NO. WE9379		