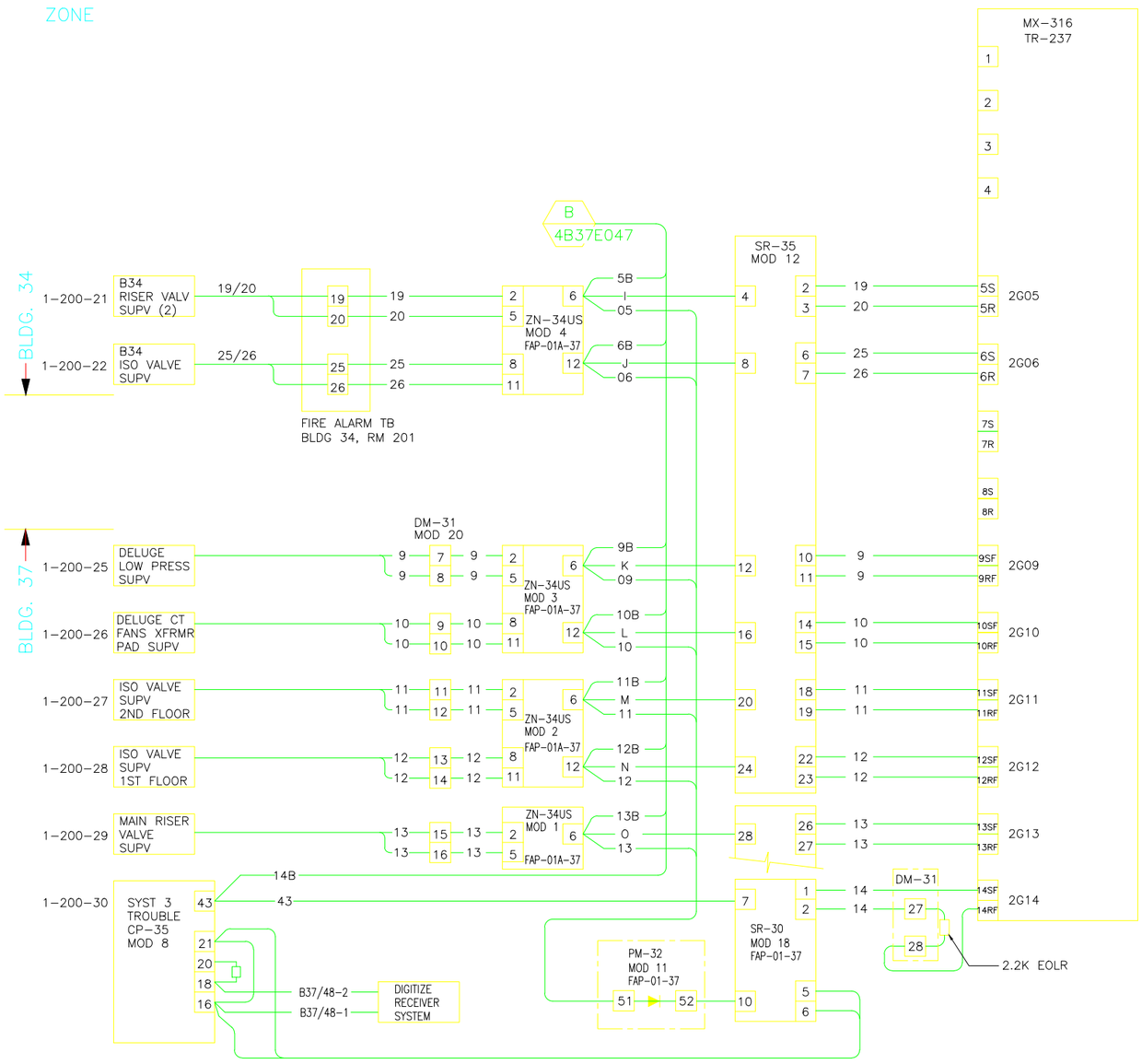

		D	LDD	LDD	MCD	4/30/13	AS BUILT PER FIELD VERIFICATIONS
		C	AD	LDD	MCD	10/11/05	AS BUILT RECORD DRAWING
		B	RZT	MCG	MCG	4/04/05	REVISED FOR DIGITIZE SYSTEM.
		A	AD	AD	MCG	01/23/04	AS-BUILT, PHASE II FA UPGRADE
PROFESSIONAL SEAL (IF REVISION, APPLIES ONLY TO REVISED WORK)	ISSUE (PROGRESS, ESTIMATE, BID, CONSTRUCTION, CONFORMED, REVISION, RECORD)	REVISION NUMBER	DRAWN BY	CHECKED BY	APPR'D BY	DATE	REMARKS

AS BUILT

D
4/30/2013

37 BLDG'S 34, 35, 37
REPLACEMENT FIRE ALARM SYSTEM
FIELD DEVICE CONNECTIVITY

UNIVERSITY OF CALIFORNIA
LAWRENCE BERKELEY NATIONAL LABORATORY
FACILITIES DIVISION

DRAWN BY	HYT	DATE	3/30/2001
CHECKED BY	HYT		3/30/2001
APPROVED BY			
CAD FILE PATH			
SCALE	Full		
DRAWING NO.	4B37E046D	SHEET	1 OF 1
PROJECT NO.	129705		