WARNING
ONLY RADIO SHOP PERSONNEL IS ALLOWED TO WORK ON THIS EQUIPMENT!
DO NOT MAKE ANY CHANGES WITHOUT NOTIFYING LLNL AT (925) 422-0370

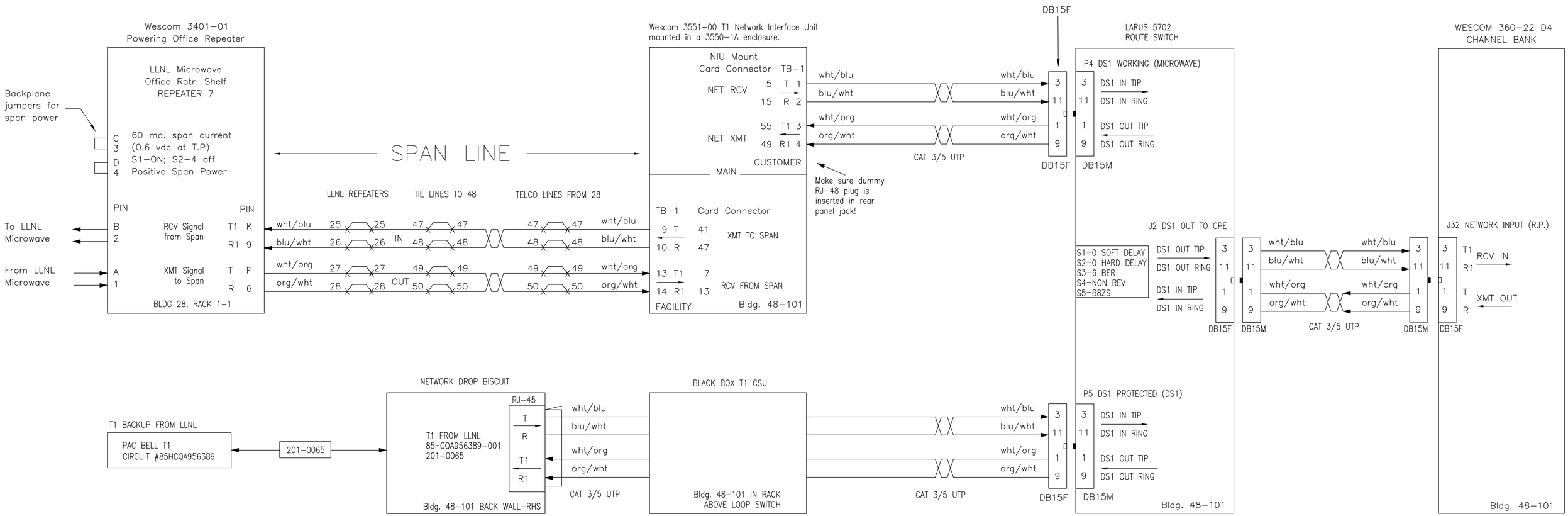

1 LLNL DS1 DATA PATH WIRING DIAGRAM
SCALE: NONE

SYMBOLS

PA48R101Nxxx

BLOCK NUMBERING
PA48 IS BUILDING 48
R101 IS ROOM 101
Nxxx IS THE BLOCK NUMBER IN THE ROOM

SIEMON PUNCH DOWN BLOCK WITH BRIDGING CLIPS. NUMBER IS ROW, LETTER IS COL.

1D 1A
2D 2A
3D 3A
4D 4A

CATAGORY 3 OR 5 UNSHIELDED TWISTED PAIR

wht/blu
blu/wht
wht/org
org/wht

PROFESSIONAL SEAL (IF REVISION, APPLIES ONLY TO REVISED WORK)	ISSUE (PROGRESS, ESTIMATE, BID, CONSTRUCTION, CONFORMED, REVISION, AS-BUILT)	REVISION NUMBER	DRAWN BY	CHECKED BY	APPR'D BY	DATE	REMARKS
	ASBUILT RECORD 10/14/2004						

28 TRUNKED RADIO SYSTEM
LLNL DS1 M/W DATA LINK W/T1 BACKUP
WIRING DIAGRAM

UNIVERSITY OF CALIFORNIA
LAWRENCE BERKELEY NATIONAL LABORATORY
FACILITIES DEPARTMENT

DISTRIBUTION LIST
2-ELECTRIC SHOP 76 (FILE I & II)
1-BLDG 90J (STICK FILE)

DRAWN BY	GMS	DATE 10/14/2004
CHECKED BY	MCG	10/14/2004
APPROVED BY	MCG	10/14/2004
CAD FILE PATH	00018473	
SCALE	As Noted	
DRAWING NO.	4B28E010_	SHEET E-1
PROJECT NO.	WJ4822	1 OF1