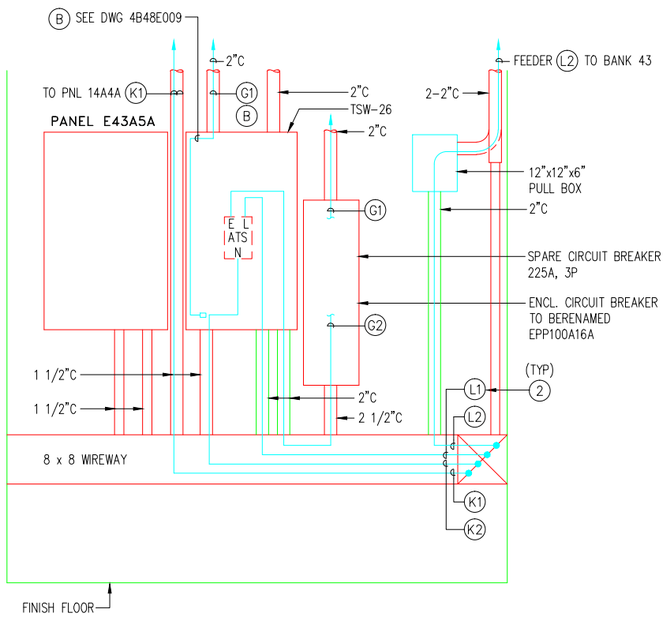

(A) RM 021 SOUTH WALL LAYOUT

SCALE: 1"=1'-0"

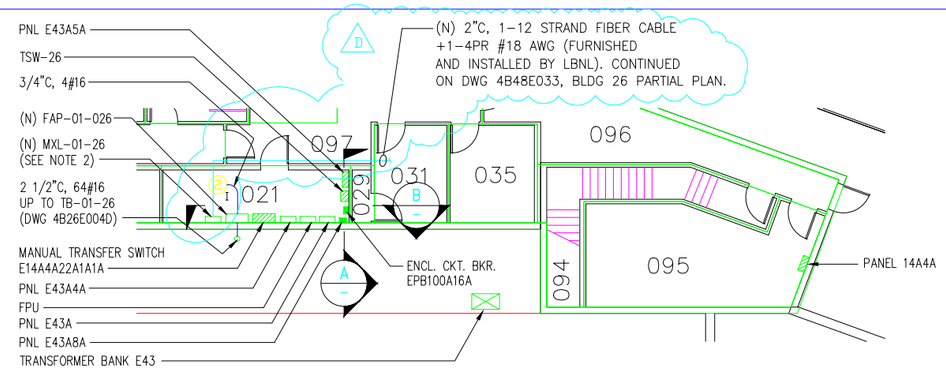

BLDG. 26 PARTIAL BASEMENT PLAN

SCALE: 1/8"='-0"

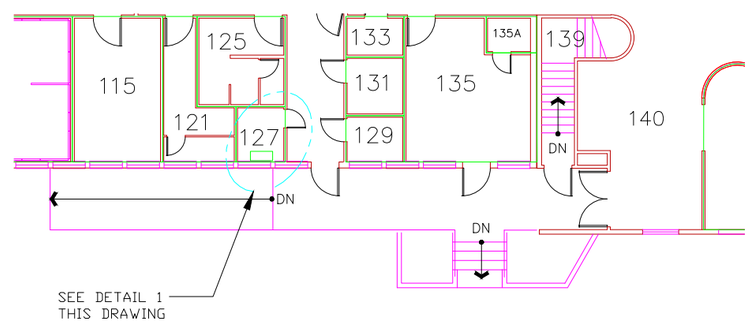

BLDG. 26 PARTIAL FIRST FLOOR PLAN

SCALE: 1/8"='-0"

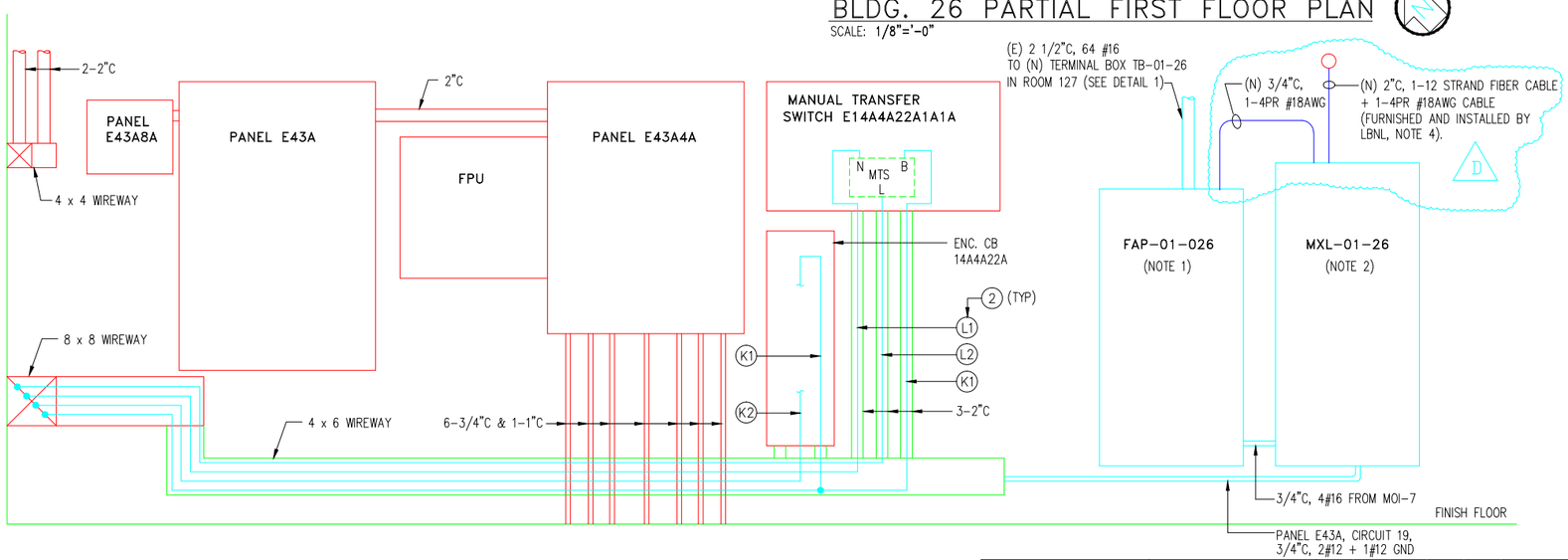

(B) RM 021 WEST WALL LAYOUT

SCALE: 1"=1'-0"

NOTES:

1. INSTALL NEW SYSTEM 3 PANEL IN ROOM 021 BEFORE REMOVING EXISTING SYSTEM 3 PANEL.
2. MOUNT (N) "MXL" ON WALL. REMOVE ONE EXISTING SHELF UNIT TO ACCOMMODATE INSTALLATION.
3. CONVERT EXISTING FIRE ALARM PANEL FA-01-26, IN ROOM 127, TO TERMINAL BOX TB-01-26.
4. "NTD" TO GET 4-PR #18 AWG CABLES FROM ELECTRIC SHOP AND INSTALL IT TO TELCO CLOSET. LEAVE 15 FEET OF COILED CABLES AT "FACP" END.

LEGEND:

(E) EXISTING

(N) NEW

(2) SMOKE DETECTOR-IONIZATION
I

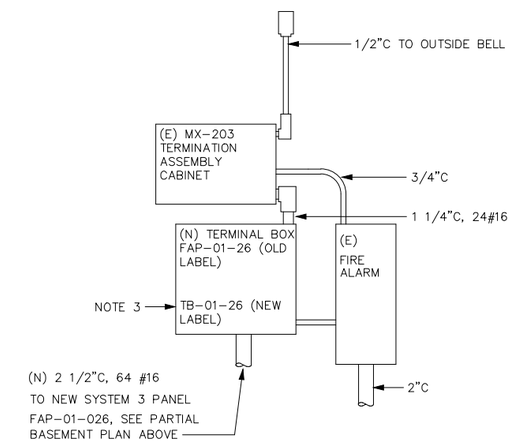

DETAIL 1

SCALE: NO TO SCALE

DISTRIBUTION LIST:

2 - ELECTRIC SHOP B76 (FILE I & II)
ORIGINAL - FLAT FILE B90F

PROFESSIONAL SEAL (IF REVISION, APPLIES ONLY TO REVISED WORK)

TITLE 2 CONSTRUCTION D 2/18/2005

ISSUE (PROGRESS, ESTIMATE, BID, CONSTRUCTION, CONFORMED, REVISION, RECORD)

REVISION NUMBER	DRAWN BY	CHECKED BY	APPR'D BY	DATE	REMARKS
D	IPM	MCG	MCG	02/18/05	ADDED COND/CABLE (FE5012 PROJECT)
C	MRC	MCG	MCG	8/18/03	AS-BUILT PHASE II FIRE ALARM UPGRADE
B	AD	MCG	MCG	03/24/03	INSTALL NEW SYSTEM 3 AT RM 021
A	FWD	MCG	MCG	12/10/98	AS BUILT

26 FIRE ALARM
BASEMENT AND FIRST FLOOR
PARTIAL PLAN AND DETAIL

UNIVERSITY OF CALIFORNIA
LAWRENCE BERKELEY NATIONAL LABORATORY
FACILITIES DIVISION

		DATE
DRAWN BY	LM	8/10/1998
CHECKED BY	LDD	8/10/1998
APPROVED BY	MCG	8/10/1998
CAD FILE PATH	00018989	
SCALE	As Noted	
DRAWING NO.	4B26E024D	SHEET 1 OF 1
PROJECT NO.	FA8040	