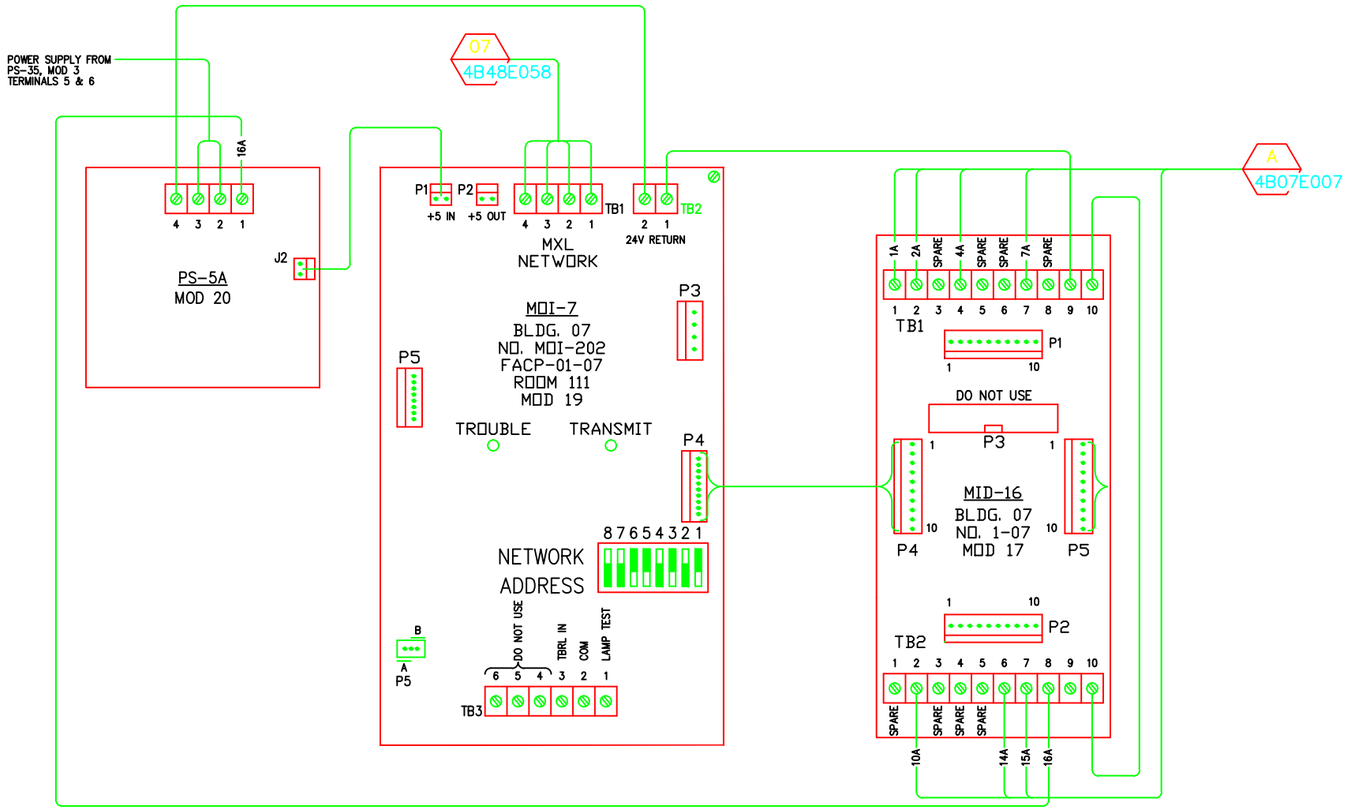

OLD ADDRESS	DESCRIPTION	MID-16 TERMINATION	MODULE TYPE & NO.	MXL NO. 1-48 ADDRESS
1B17	WATERFLOW, SPRINKLERS BOTH FLOORS	TB1, No. 1	MID 16, 1-07	1-202-1
1B18	WATERFLOW, SPRINKLERS N. TRAILERS-BLDGS C & B	TB1, No. 2	MID 16, 1-07	1-202-2
1B19	NOT USED	TB1, No. 3	MID 16, 1-07	1-202-3
1B20	SUPERVISION, RISER AND ISOLATION VALVES	TB1, No. 4	MID 16, 1-07	1-202-4
1B21	NOT USED	TB1, No. 5	MID 16, 1-07	1-202-5
1B22	NOT USED	TB1, No. 6	MID 16, 1-07	1-202-6
1B23	FCB'S (2), SECOND FLOOR EAST ENTRANCE	TB1, No. 7	MID 16, 1-07	1-202-7
1B24	NOT USED	TB1, No. 8	MID 16, 1-07	1-202-8
1B25	NOT USED	TB2, No. 1	MID 16, 1-07	1-202-9
1B26	FCB'S, FIRST FLOOR, SD'S (3) WAREHOUSE	TB2, No. 2	MID 16, 1-07	1-202-10
1B27	NOT USED	TB2, No. 3	MID 16, 1-07	1-202-11
1B28	NOT USED	TB2, No. 4	MID 16, 1-07	1-202-12
1B29	NOT USED	TB2, No. 5	MID 16, 1-07	1-202-13
1B30	SD AT FACP	TB2, No. 6	MID 16, 1-07	1-202-14
1B31	SYSTEM 3 FACP TROUBLE	TB2, No. 7	MID 16, 1-07	1-202-15
N/A	MOI RIBBON UNPLUGGED	TB2, No. 8	MID 16, 1-07	1-202-16

AS BUILT

C
4/24/2013

REVISION NUMBER	DRAWN BY	CHECKED BY	APP'R'D BY	DATE	REMARKS
C	LDD	LDD	MCD	04/24/13	AS BUILT PER FIELD VERIFICATIONS
B	SL			04/20/10	REVISED FOR AS-BUILTS
A	AD	LDD	MCD	02/27/06	REVISED FOR MXL COPPER LOOP

PROFESSIONAL SEAL (IF REVISION, APPLIES ONLY TO REVISED WORK)

ISSUE (PROGRESS, ESTIMATE, BID, CONSTRUCTION, CONFORMED, REVISION, RECORD)

07
FIRE ALARM SYSTEM
MOI/MID MODULE ARRANGEMENT

UNIVERSITY OF CALIFORNIA
LAWRENCE BERKELEY NATIONAL LABORATORY
FACILITIES DIVISION

DRAWN BY	MRC	8/13/2004
CHECKED BY	AD	8/13/2004
APPROVED BY	MCG	8/13/2004
CAD FILE PATH		
SCALE	Full	
DRAWING NO.	4B07E031C	
SHEET	FA	1 OF 1
PROJECT NO.	FB4010	